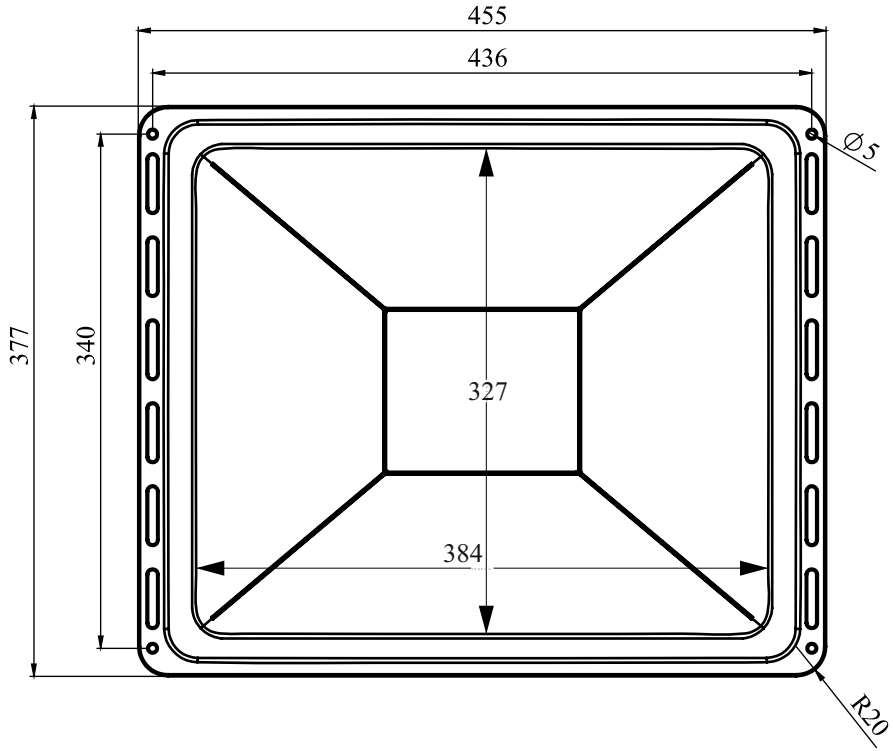

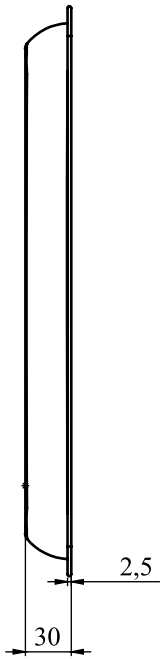

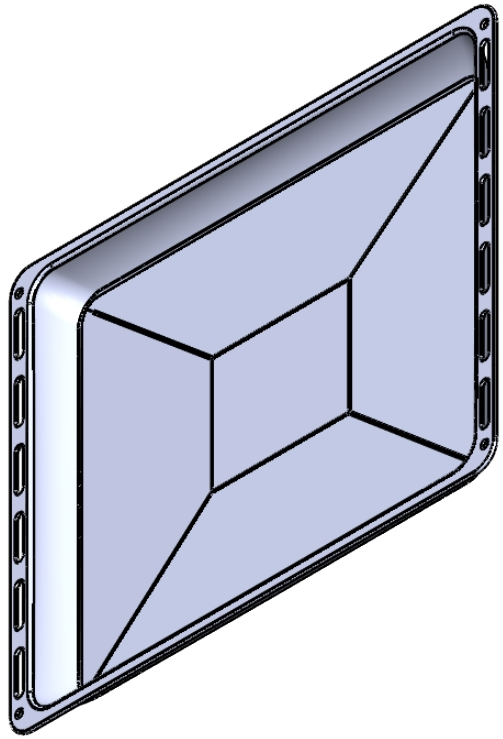

Ecotronic deep pan 450 x 340 x 30mm
48040009