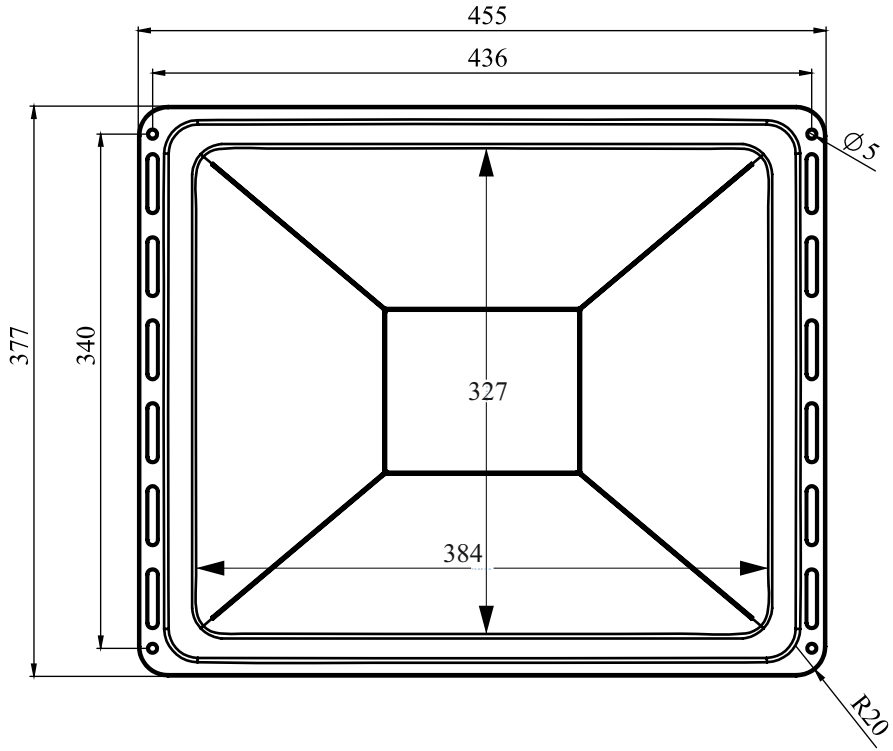

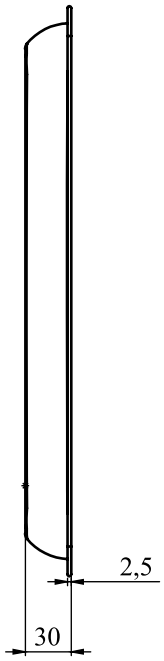

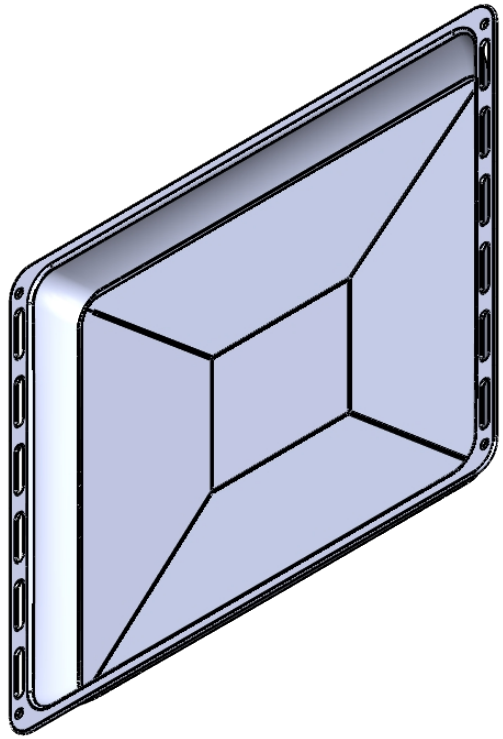

Ecotronic deep pan 50mm
48040008