Installation Figure
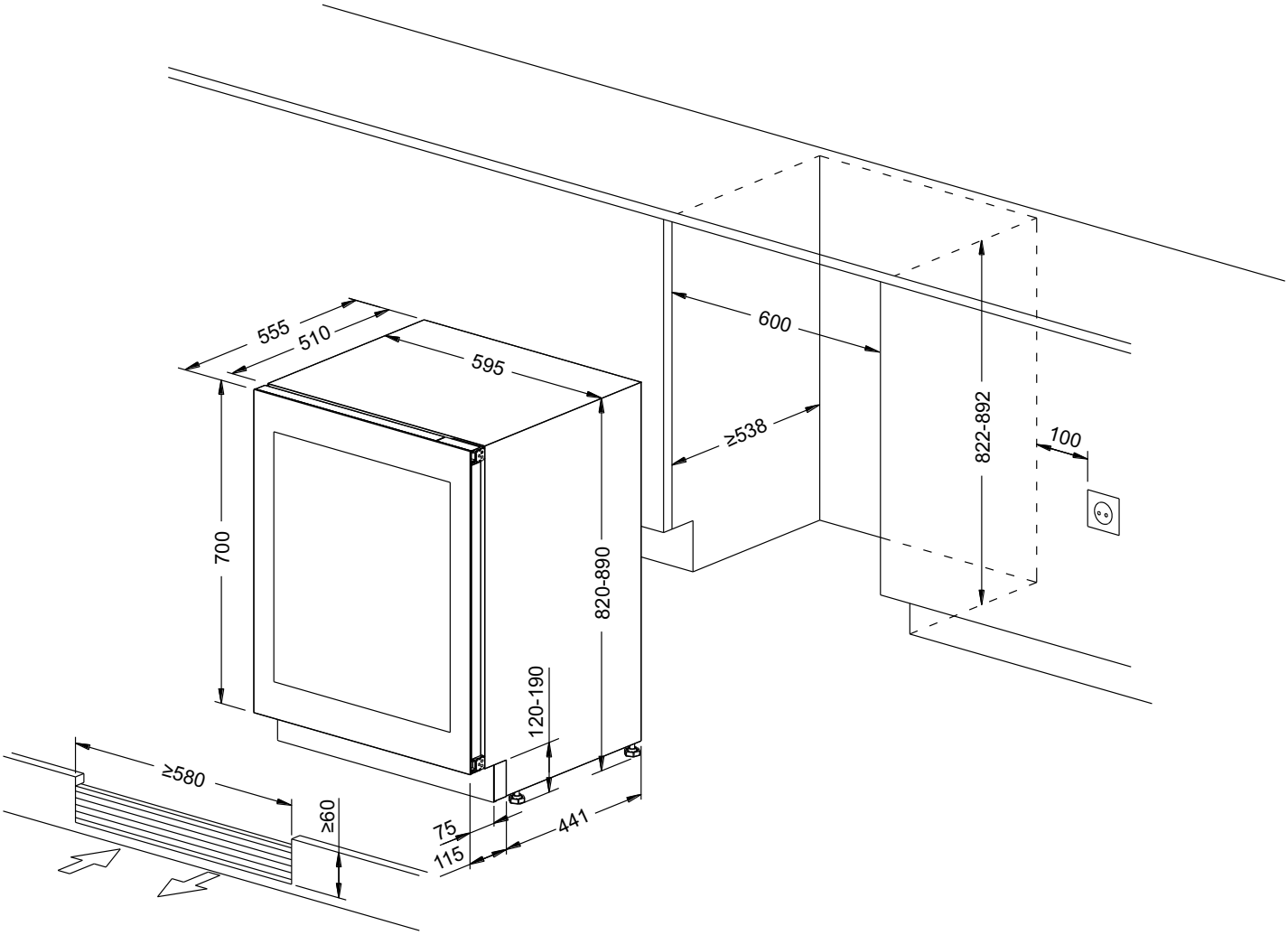
Model WU6070P-2B45