# Operating and installation instructions

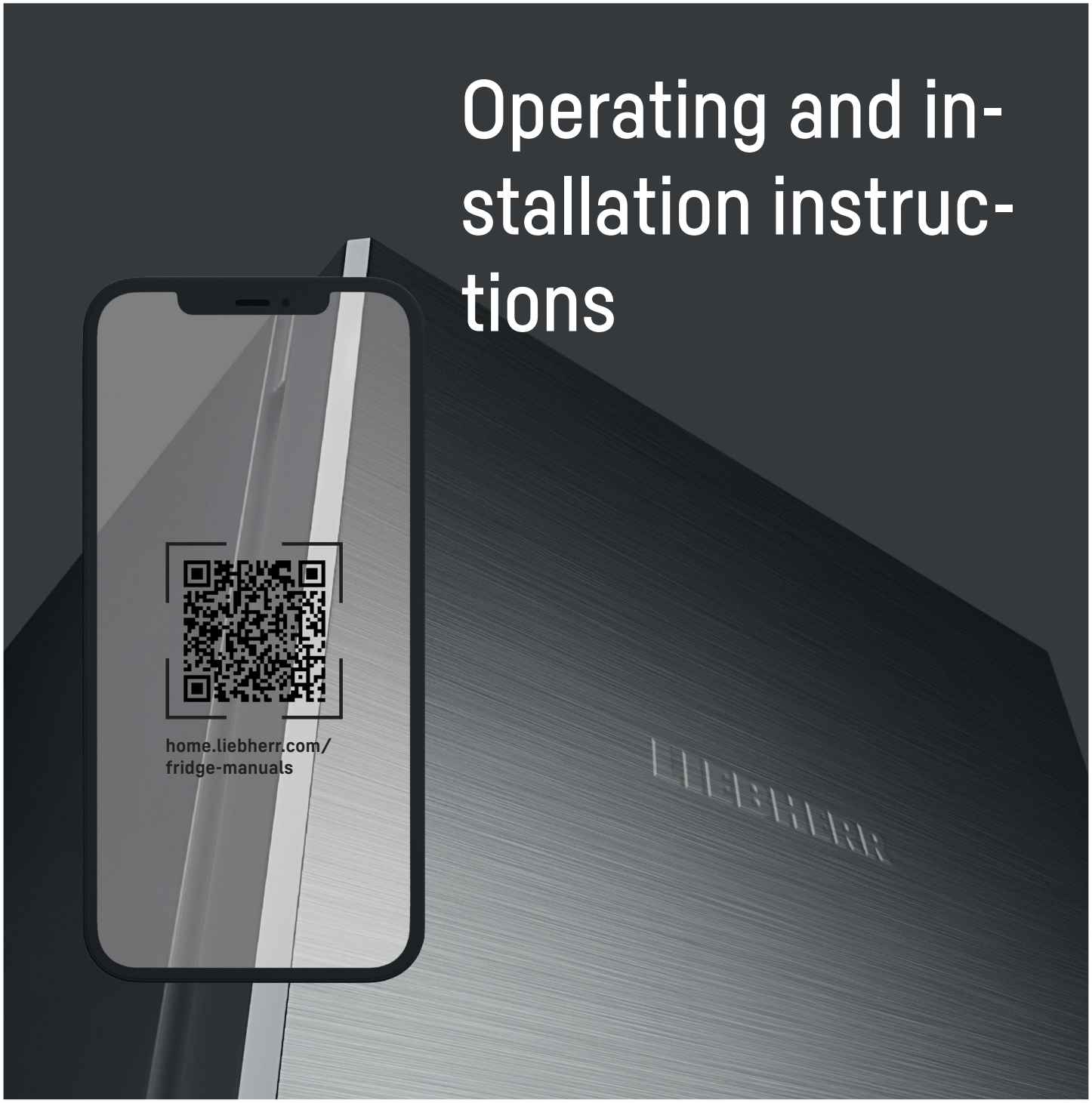


EN ORIGINAL OPERATOR'S MANUAL

LIEBHERR

# Contents


**1 General safety information ... 3**
1.1 Intended use ... 3
1.2 Foreseeable erroneous use ... 3
1.3 User group ... 3
1.4 Warning notices – Risks for the user ... 3
1.5 Faults, damage and repairs ... 4
1.6 Information concerning disposal ... 4
1.7 Conformity ... 4
1.8 Climate classes ... 4
1.9 SVHC substances in accordance with the REACH Regulation ... 4
1.10 EPREL database ... 4
1.11 Open source licences ... 4
1.12 Product cybersecurity ... 4
1.13 Spare parts ... 5
1.14 Warning levels ... 5

**2 Appliance at a glance ... 5**
2.1 Scope of delivery ... 5
2.2 Overview of the appliance and equipment ... 5

**3 Setting up and connecting ... 5**
3.1 Installation requirements ... 5
3.2 Appliance dimensions ... 6
3.3 Ventilation requirements ... 6
3.4 Connection dimensions for the power supply ... 6
3.5 Transporting the appliance ... 7
3.6 Unpacking the appliance ... 7
3.7 Removable table top ... 7
3.8 Swapping the door hinge side ... 7
3.9 Mounting wall spacers ... 10
3.10 Setting up the appliance ... 11
3.11 Installing multiple appliances ... 11
3.12 Sliding the appliance under a worktop ... 11
3.13 After setting up ... 12
3.14 Connecting the appliance to the power supply ... 12
3.15 Disposing of packaging ... 13

**4 Functionality of the display ... 13**
4.1 Navigation by touchbutton and symbol explanation ... 13
4.2 Menus ... 13

**5 Putting into operation ... 14**
5.1 Switching on device (first use) ... 14

**6 Storage ... 15**
6.1 Information regarding storage ... 15
6.2 Fridge compartment ... 15
6.3 4-star freezer compartment* ... 15
6.4 Storage times ... 15

**7 Saving energy ... 15**

**8 Controls ... 16**
8.1 Operating controls and display elements ... 16
8.1.1 Temperature display/Status indicator ... 16
8.1.2 LED behaviour ... 16
8.1.3 Audible signals ... 16
8.2 Appliance functions ... 17
8.2.1 Notes on the appliance functions ... 17
Switching the appliance off and on ... 17
Temperature ... 17
SuperCool* ... 17
SabbathMode ... 18
Input lock ... 18
Demo mode ... 18
Resetting to factory settings ... 19
8.3 Messages ... 19
8.3.1 Ending messages ... 19

**9 Features ... 19**
9.1 4-star freezer compartment* ... 19
9.2 Door rack ... 20
9.3 Drawers ... 20
9.5 Butter dish ... 21
9.6 Egg rack* ... 21
9.7 Bottle holder ... 21

**10 Maintenance ... 21**
10.1 Dismantling the door rack ... 21
10.2 Assembling the door rack ... 22
10.3 Disassembling / assembling pull-out systems ... 22
10.4 Defrosting the appliance ... 22
10.5 Defrosting the freezer compartment manually* ... 22
10.6 Cleaning the appliance ... 22

**11 Customer help ... 23**
11.1 Technical specifications ... 23
11.2 Operating noise ... 23
11.3 Technical fault ... 24
11.4 Customer Service ... 25
11.5 Model plate ... 25

**12 Shutting down ... 26**

**13 Disposal ... 26**
13.1 Preparing the appliance for disposal ... 26
13.2 Disposing of the appliance in an environmentally friendly manner ... 26


The manufacturer is continually working on the further development of all types and models. Please be aware that we reserve the right to make changes to the shape, equipment and technology.

| Symbol | Explanation |
|---|---|
|  | **Read instructions**<br>Please read the information in these instructions carefully to understand all of the benefits of your new appliance. |
|  | **Additional information on the Internet**<br>The digital manual with additional information and in other languages can be found via the QR code on the front of the manual or by entering the service number at **home.liebherr.com/fridge-manuals**.<br>The service number can be found on the serial tag:<br>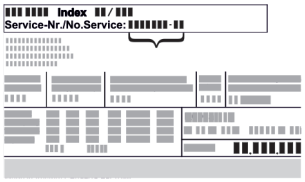<br>*Fig.* Example illustration |
|  | **Check appliance**<br>Check all parts for transport damage. If you have any complaints, please contact your agent or customer service. |

| Symbol | Explanation |
|---|---|
|  | **Differences**<br>These instructions apply to a range of models, so differences are possible. Sections that apply to certain models only are marked with an asterisk (*). |
|  | **Instructions and results**<br>Instructions are marked with a ▶.<br>Results are marked with a ▷. |
|  | **Videos**<br>Videos about the appliances are available on the YouTube channels of Liebherr-Hausgeräte. |

**Open source licences:**

The appliance contains software components that use open source licences. Information on the open source licences used can be found here: **home.liebherr.com/open-source-licences**

This user information applies to the following appliances:

| | |
|---|---|
| R.. | 10.. / 12.. / 14.. |
| TK | 12Ve00 / 12Ve01 / 14Ve00 / 14Ve01 / 14Vd00 / 14Vd01 / 14Vddg01 / 14Vddg00 |

# 1 General safety information

Keep this user information in a safe place so that you can refer to it at any time.

If you pass on the appliance, pass this user information on to subsequent owners.

To use the appliance properly and safely, read this user information carefully before installation and use. Always follow the instructions, safety instructions and warnings contained therein. They are important so that you can install and operate the appliance safely and properly.

## 1.1 Intended use

- This appliance is intended for household use and similar applications such as:
  - in staff kitchen areas in shops, offices and other work areas
  - in agriculture and by guests in hotels, motels and other accommodation
  - bed and breakfasts
  - in catering and similar wholesale operations
- Further uses:
  - This appliance is not suitable for freezing food.*
  - All other types of application are impermissible.

## 1.2 Foreseeable erroneous use

The following applications are expressly prohibited:

- Storage and cooling of:
  - Chemically unstable, flammable or corrosive substances
  - Explosive substances, such as aerosol containers with flammable propellant gas
  - Medication, blood plasma, laboratory compounds or similar substances and products subject to the Medical Device Directive 2007/47/EC
- Use in explosive areas

Improper use of the appliance will result in damage or spoilage of the stored foods.

## 1.3 User group

- This appliance must not be used by persons (including children) with reduced physical, sensory or mental capabilities, or by persons with a lack of experience and knowledge, unless they are supervised by a person responsible for their safety or have been given instructions on how to use the appliance. Children must be supervised to ensure that they do not play with the appliance.
- Children aged between 3 and 8 are allowed to load and unload the fridge-freezer.

## 1.4 Warning notices – Risks for the user

- WARNING: Keep ventilation openings in the equipment housing or in installations clear of obstructions.
- WARNING: Do not use any mechanical devices or other means to speed up the defrosting process other than those recommended by the manufacturer.
- WARNING: Do not damage the coolant circuit.
- WARNING: Do not operate electrical appliances inside the refrigerator/freezer compartment that are not of the type recommended by the manufacturer.
- WARNING: When installing the appliance, ensure that the mains lead is not trapped or damaged.
- WARNING: Do not place portable multiple sockets or power supply units at the rear of the appliance.

Once the appliance has been installed, it must still be possible to disconnect it from the mains.

- Accessible mains plug (above, below or next to the appliance)
- Tripping of the fuse in the building's electrical installation in accordance with the installation regulations.



WARNING: Fire hazard/flammable substances.

The symbol is located on the compressor and may also appear in other places on the appliance. It marks the danger posed by flammable substances. Do not remove the sticker.

- The more refrigerant there is in the appliance, the larger than room must be in which it is located. In rooms that are too small, a leak can product a flammable gas/air mixture. For every 8 g of refrigerant, the installation room must be at least 1 $m^3$ in size. Information on the refrigerant contained is given on the type plate inside the appliance.
- Clean regularly surfaces that can come in contact with food and accessible drainage systems.
- Package raw meat or fish in clean, closed containers. This will prevent meat or fish from touching or dripping onto other food.
- If the fridge-freezer is left empty for a long period, switch it off, defrost it, clean it, dry it and leave the door open to prevent mould from forming.
- Avoid prolonged skin contact with cold surfaces or with cold food. Use gloves for protection, for example.
- Alcoholic beverages and other containers bearing alcohol must be sealed tight for storage. Any leaking alcohol may ignite due to electrical parts.
- Only open the door for a short time. This prevents the temperature inside the appliance from rising.

- Do not reach between the door and the appliance when opening and closing. Fingers may become trapped.
- Do not place any items in the front section of the bottom glass shelf to ensure that the appliance door closes properly. (see 6.2 Fridge compartment) (see 9.2 Door rack)
- WARNING: This appliance must be secured in accordance with the instruction manual to prevent any risks arising from a lack of stability.
- Follow the instructions for installation and connection. (see 3 Setting up and connecting)

## 1.5 Faults, damage and repairs

- Mains connection with cooling appliance plug:
  If the mains lead of this appliance is damaged, it must be replaced with a special connection line available from the manufacturer or its customer service department. The customer may make the change.
- Repairs and interventions on the appliance may only be carried out by the customer service or by other qualified personnel trained for this purpose.
- In the event of malfunctions and appliance faults, pull out the mains plug or switch off the fuse. Always hold the plug when pulling out the mains plug. Never tug on the cable.

## 1.6 Information concerning disposal



The crossed-out rubbish bin symbol is a note that the appliance must not be disposed of with unsorted household waste and must be placed in a separate collection. It contains recyclable materials and may be reusable.



The symbol may be found on the compressor. It pertains to the oil in the compressor and indicates the following danger: **Can be fatal if swallowed or with penetration of the respiratory tract.** This information is only significant for recycling. No risk exists with normal use.



This or a similar sticker may be on the rear of the appliance. It indicates that there are vacuum insulation panels (VIP) or perlite panels in the door and/or housing. This information is only significant for recycling. Do not remove the sticker.

- The old appliance must be properly and therefore professionally disposed of in accordance with the local applicable regulations and legislation. When transporting the old appliance do not damage the refrigerant circuit, so that the refrigerant inside (information on the type plate) and the oil do not leak out uncontrolled.
- For Germany: The appliance can be disposed of free of charge via the class 1 collection containers at the local recycling/reusable material centres. When purchasing a new refrigerator/freezer and a sales area > 400 $m^2$, the old appliance is also taken back free of charge via the trade.
- EU: Please check with your local authorities to find out how to dispose of old appliances.

## 1.7 Conformity

The coolant circuit has been tested for leak-tightness. The appliance complies with the relevant safety regulations and directives.

The full text of the EU Declaration of Conformity is available at the following web address: www.liebherr.com

## 1.8 Climate classes

Depending on its climate class, the appliance is designed for operation within certain ambient temperature limits. The climate class for your appliance is printed on the type plate.

**Note**

▶ In order to guarantee fault-free operation comply with the specified ambient temperatures.

| Climate class | for ambient temperatures from |
|---|---|
| SN | 10 °C to 32 °C |
| N | 16 °C to 32 °C |
| ST | 16 °C to 38 °C |
| T | 16 °C to 43 °C |
| SN-ST | 10 °C to 38 °C |
| SN-T | 10 °C to 43 °C |

## 1.9 SVHC substances in accordance with the REACH Regulation

- You can use the following link to check whether your appliance contains SVHC substances in accordance with the REACH Regulation:
  https://go.liebherr.com/z3eewm

## 1.10 EPREL database

- From 1 March 2021, the information on energy labelling and eco-design requirements will be available in the European product database (EPREL). The product database can be accessed via the following link https://eprel.ec.europa.eu/. Here, you are asked to enter the model identifier. You will find the model identifier on the type plate.

## 1.11 Open source licences

- The appliance contains software components that use open source licences. Information on the open source licences used can be found here:
  home.liebherr.com/open-source-licences

## 1.12 Product cybersecurity

- This appliance features remote monitoring and control functions that work in conjunction with the Liebherr-Household Appliances digital product ecosystem. These functions are protected by appropriate security measures. The user is responsible for ensuring an appropriately secure network environment so that networked functions can be used safely. When using third-party systems via the interfaces (APIs) provided, Liebherr-Hausgeräte's security support is limited to the appliance and the Liebherr-Hausgeräte digital product environment. For information on product cyber security, please visit:
  www.liebherr.com/psirt
  You can also report potential security vulnerabilities there. Liebherr provides security updates for this appliance for a period of 10 years from the date it is placed on the market. Security updates are made available via Liebherr-Hausgeräte's digital product environment. To receive security updates, please register via the SmartDevice app or SmartMonitoring and connect the appliance to Liebherr-Hausgeräte's digital product ecosystem.

## 1.13 Spare parts

- The spare parts availability for functional parts and stockable parts of the equipment is 15 years.

## 1.14 Warning levels

| | |
|---|---|
| **DANGER** | Identifies an immediately dangerous situation that will result in death or serious bodily injuries if it is not prevented. |
| **WARNING** | Identifies a dangerous situation that could result in death or serious bodily injury if it is not prevented. |
| **CAUTION** | Identifies an immediately dangerous situation that could result in slight or moderate injuries if it is not prevented. |
| **ATTENTION** | Identifies a hazardous situation that could result in property damage if it is not prevented. |
| **Note** | Identifies useful information and tips. |

# 2 Appliance at a glance

## 2.1 Scope of delivery

Check all parts for transport damage. Contact your dealer or customer service in the event of complaints. (see 11.4 Customer Service)

Your new appliance comes with the following parts:

- Standalone appliance
- Features (depending on the model)
- Installation materials (depending on the model)
- “Quick Start Guide”
- “Installation Guide”*
- Service Brochure

## 2.2 Overview of the appliance and equipment

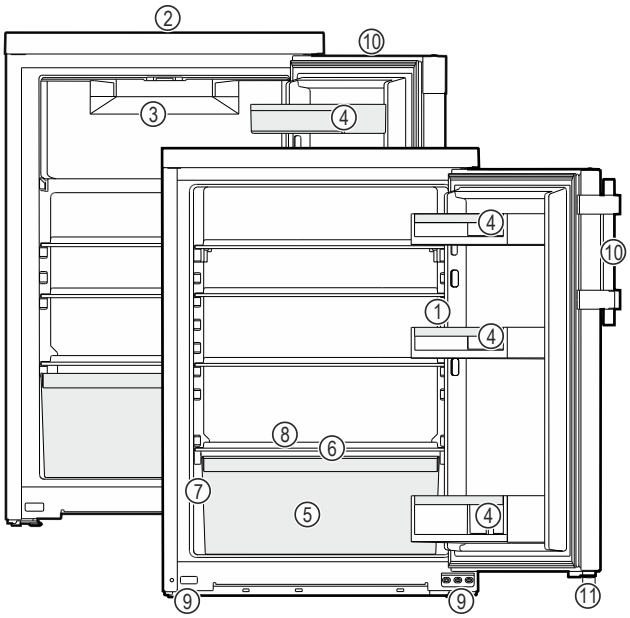


*Fig. 1 Example illustration*

**(1)** Controls, lighting
**(2)** Ventilation slot
**(3)** Freezer compartment*
**(4)** Door rack
**(5)** Vegetable bins/Easy-Fresh-Safe*
**(6)** EasyFresh-Safe lid*
**(7)** Type plate
**(8)** Defrost water drain
**(9)** Adjustable feet (front)
**(10)** Lever grip/recessed handle*
**(11)** Spacer*

# 3 Setting up and connecting

## 3.1 Installation requirements

The installation conditions are crucial to ensure that you can operate your appliance safely, efficiently and without problems.

- Observe all safety instructions.
- Consider the location and position in the room.

**WARNING**
Danger of fire due to incorrect positioning!
If the mains cable or plug touches the back of the appliance, the vibration can damage the mains cable or the plug resulting in a short circuit.

▶ Make sure the mains cable is not trapped under the appliance when you position the appliance.
▶ Stand the appliance so that it is not touched by connectors or main cables.
▶ Do not connect any appliances to sockets in the area of the back of the appliance.
▶ Do **not** place and operate multi-sockets/power distributors and other electronic devices (such as halogen transformers) at the back of the appliances.

**WARNING**
Fire hazard due to dampness!
If live parts or the mains lead become damp this may cause short circuits.

▶ The appliance is designed for use in enclosed areas. Do not operate the appliance outdoors or in areas where it is exposed to splash water or damp conditions.

**WARNING**
Risk of fire due to leaking refrigerant and oil!
The refrigerant inside the appliance is environmentally friendly, but flammable. The oil it contains is also flammable. Escaping refrigerant and oil can ignite in high concentrations and in contact with an external heat source.

▶ Do not damage the refrigerant circuit pipes or the compressor.

### 3.1.1 Installation site

- Only set up and use the appliance in enclosed spaces.
- A dry and well-ventilated room is an optimum installation location.
- If the appliance is installed in a very damp environment, condensation may form on the appliance exterior. Always make sure there is good ventilation and aeration at the installation site.

- The more refrigerant there is in the appliance, the larger than room must be in which it is located. In rooms that are too small, a leak can product a flammable gas/air mixture. For every 8 g of refrigerant, the installation room must be at least 1 $m^3$ in size. Information on the refrigerant contained is given on the type plate inside the appliance.
- The floor on which the appliance stands must be horizontal and level.

### 3.1.2 Position in space

- Do not place the appliance in direct sunlight or near radiators or similar sources of heat.
- You can place the appliance directly next to an oven.
- If the appliance is placed directly next to an oven, the energy consumption may increase slightly. This is dependent on the service life and usage intensity of the oven.
- Always position the appliance with the rear directly against the wall, or with wall spacer brackets attached (see below) then with these directly against the wall.
- Use in hazardous areas is not permitted.

### 3.1.3 Insert under worktop

- You can slide the appliance under a worktop. (see 3.12 Sliding the appliance under a worktop)

## 3.2 Appliance dimensions

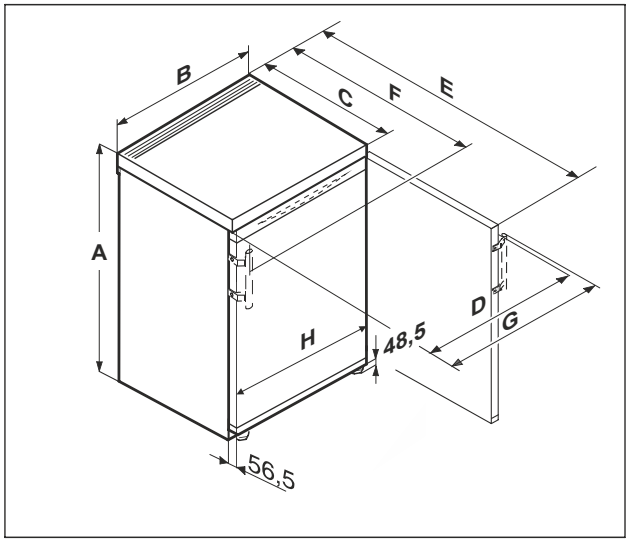


*Fig. 2 Example illustration*

| R.. 10..* | |
|---|---|
| **A (mm)** | 680 |
| **B (mm)** | 550 |
| **C (mm)** | 607[x] |
| **D (mm)** | 547 |
| **E (mm)** | 1106[x] |
| **H (mm)** | 547 |

*For appliances with a recessed handle*

| R..12.. / TK 12Ve00 / TK 12Ve01* | |
|---|---|
| **A (mm)** | 850 |
| **B (mm)** | 500 |
| **C (mm)** | 607[x] |

| R..12.. / TK 12Ve00 / TK 12Ve01* | |
|---|---|
| **D (mm)** | 497 |
| **E (mm)** | 1056[x] |
| **H (mm)** | 497 |

*For appliances with a recessed handle*

| TK 14Ve00 / TK 14Ve01 / TK 14Vd00 / TK 14Vd01* | |
|---|---|
| **A (mm)** | 850 |
| **B (mm)** | 550 |
| **C (mm)** | 607[x] |
| **D (mm)** | 547 |
| **E (mm)** | 1106[x] |
| **H (mm)** | 547 |

*For appliances with a recessed handle*

| R..14.. / TK 14Vddg00 / TK 14Vddg01* | |
|---|---|
| **A (mm)** | 850 |
| **B (mm)** | 550 |
| **C (mm)** | 607[x] |
| **D (mm)** | 545 |
| **E (mm)** | 1112[x] |
| **F (mm)** | 648[x] |
| **G (mm)** | 589 |
| **H (mm)** | 547 |

*For appliances with a lever handle*

[x] This dimension increases by 35 mm on appliances with attached wall spacer brackets. (see 3.9 Mounting wall spacers)

## 3.3 Ventilation requirements

**NOTICE**
Danger of overheating due to insufficient air ventilation!
The compressor may be damaged if there is insufficient air ventilation.
▶ Take care to ensure adequate air ventilation.
▶ Observe the ventilation requirements.

If the appliance is integrated into a kitchen unit, the following ventilation requirements must be observed:*

- As a general rule: the larger the ventilation cross section, the more energy the appliance will be able to save.*

## 3.4 Connection dimensions for the power supply

The connection to the power supply is on the rear of the appliance. To connect your appliance safely, ensure that the following requirements are met:

❑ Dimensions for the connection to the power supply are known and are adhered to. See table below.
❑ Connection to the power supply according to the instructions. (see 3.14 Connecting the appliance to the power supply)

## 3.5 Transporting the appliance

### 3.5.1 Transporting the appliance for initial use

Ensure that the following requirements are met:

- ❑ The appliance is packaged.
- ❑ The appliance is upright.

▶ Transport the appliance with the help of two people.
▶ Unpacking the appliance. (see 3.6 Unpacking the appliance)

### 3.5.2 Transporting the appliance after initial use

Observe the following instructions if you wish to transport or move the appliance again after initial use.

Ensure that the following requirements are met:

- ❑ The appliance is emptied.
- ❑ The appliance is upright.
- ❑ Appliance with door(s): Door is secured against accidental opening.
- ❑ Appliance with telescopic unit: The telescopic unit is secured against accidental opening.
- ❑ Appliance with adjustable feet: Adjustable feet are screwed in.

▶ Transport the appliance with the help of two people.

After transport:

▶ Unscrew the adjustable feet on the appliance.
▶ Align the appliance.

## 3.6 Unpacking the appliance

**NOTICE**
Risk of damage if the unit is moved!
If you move the unit across the floor without any protection, it may damage the floor.
▶ Make sure you cover the floor properly before removing the packaging from the unit.

▶ Check the appliance and packaging: If you suspect that the goods have been damaged in transit, please contact the supplier before connecting them.

**NOTICE**
Damage to property caused by pointed or sharp objects!
Using pointed or sharp objects when removing packaging material may damage the appliance.
▶ Do not use any pointed or sharp objects to remove the packaging material.

▶ Remove the packaging materials.
▶ The appliance is positioned correctly: Remove the protective film from the door and side panels.

## 3.7 Removable table top

The appliance's tabletop is removable. If you want to slide the table-top appliance under a worktop, you will need to remove the table top. (see 3.12 Sliding the appliance under a worktop)

### 3.7.1 Removing the table top

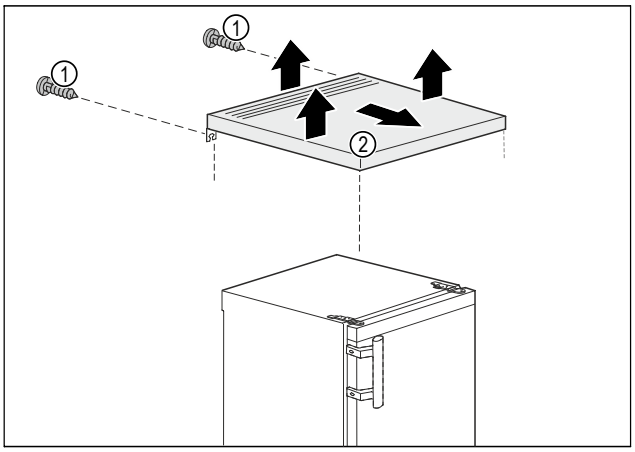


*Fig. 3*

▶ Remove the screws *Fig. 3 (1)* on the rear end.
▶ Raise the table top *Fig. 3 (2)* at the back.
▶ Push the table top *Fig. 3 (2)* forwards.
▶ Remove the table top *Fig. 3 (2)* upwards.
▷ The table top *Fig. 3 (2)* has been removed.

### 3.7.2 Fitting the table top

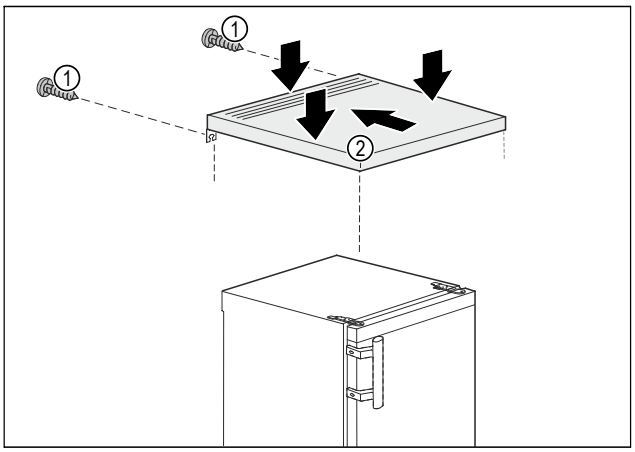


*Fig. 4*

▶ Place the table top *Fig. 4 (2)* on the appliance.
▶ Push the table top *Fig. 4 (2)* backwards.
▶ Press the table top *Fig. 4 (2)* down at the back.
▶ Tighten the screws *Fig. 4 (1)* on the rear end.
▷ The table top *Fig. 4 (2)* has been fitted.

## 3.8 Swapping the door hinge side

**Tool**

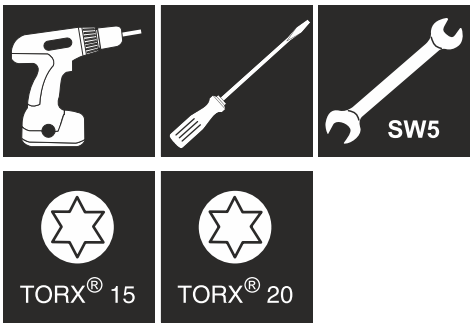

**WARNING**
Danger of injury due to door falling out!
If the bearing parts are not screwed on tightly enough, the door may fall out. This can result in serious injuries. In addition, the door may not close with the result that the appliance does not cool properly.
▶ Screw on the bearing brackets/bearing pins tightly with 4 Nm.
▶ Check all screws and retighten them if necessary.

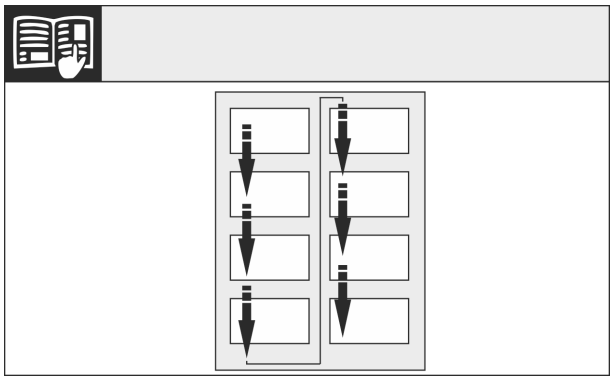

*Fig. 5*

Note the direction of reading.

### 3.8.1 Preparation

**Note**
▶ Remove any food from the door racks before removing the door, so that no food falls out.

▶ Tilt the device backwards with two persons.
For appliances without a 4-star freezer compartment:*
▶ Remove the spacer *(13)* from under the left-hand side of the door.*

### 3.8.2 Loosen the lower bearing components

**CAUTION**
Danger of injury due to door tipping out!
If you remove the bolt on the door completely, the door may tilt out and you may injure yourself.
▶ Hold the door firmly before removing the bolt.

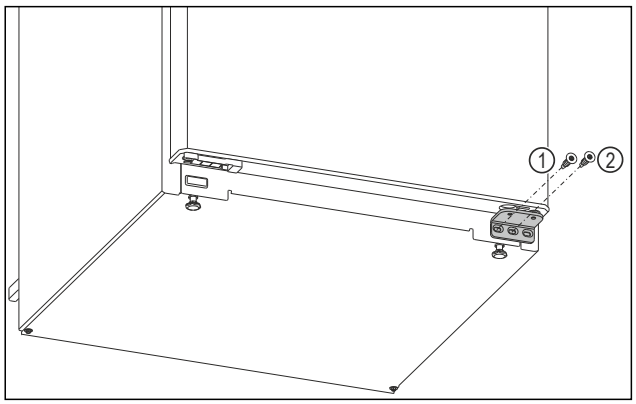


*Fig. 6*
▶ Unscrew the inner screw on the lower swap bearing block with a Torx 20 screwdriver. *Fig. 6 (1)*
▶ Unscrew the middle screw on the lower swap bearing block with a Torx 20 screwdriver. *Fig. 6 (2)*
▶ Put the screws aside.

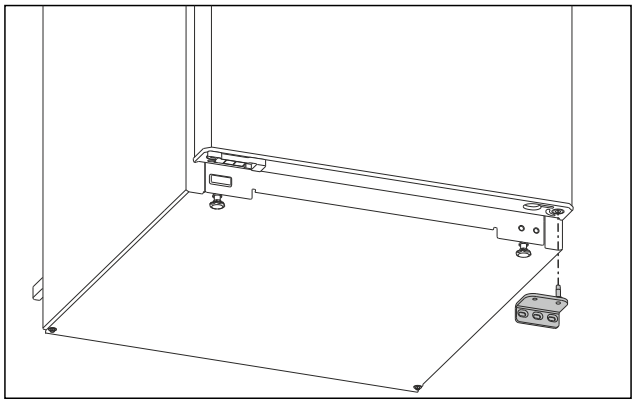

*Fig. 7*
▶ Remove the swap bearing block downwards. (see Fig. 7)
▶ Set the swap bearing block aside.

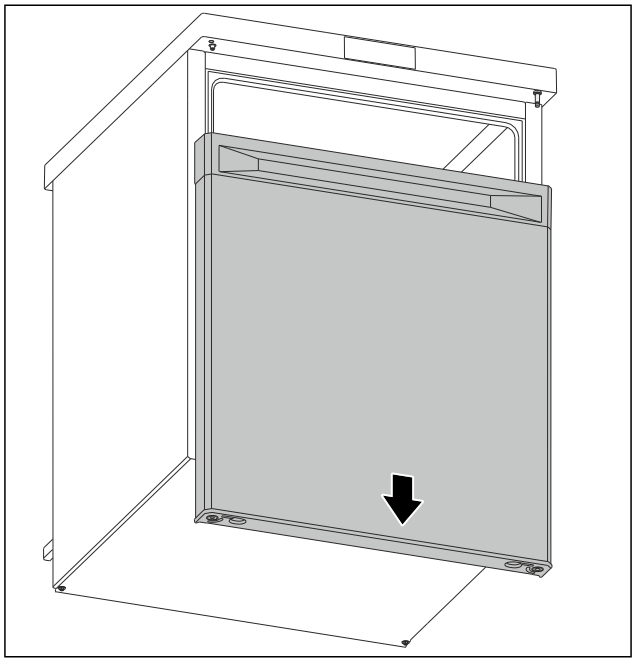

*Fig. 8*
▶ Remove the door downwards. (see Fig. 8)
▶ Set down the door.

### 3.8.3 Preparing the door

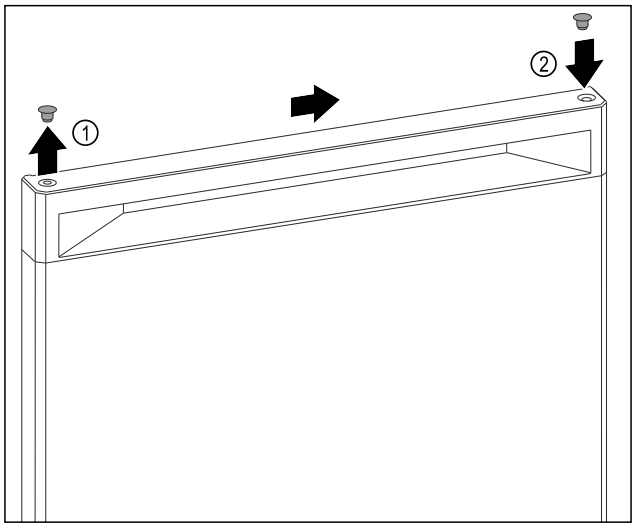


*Fig. 9*
▶ Carefully lift the cover plug on the top of the door *Fig. 9 (1)* with a slotted screwdriver.
▶ Insert the cover plug on the opposite side. *Fig. 9 (2)*


* Depending on model and options

### 3.8.4 Re-locating the handle*

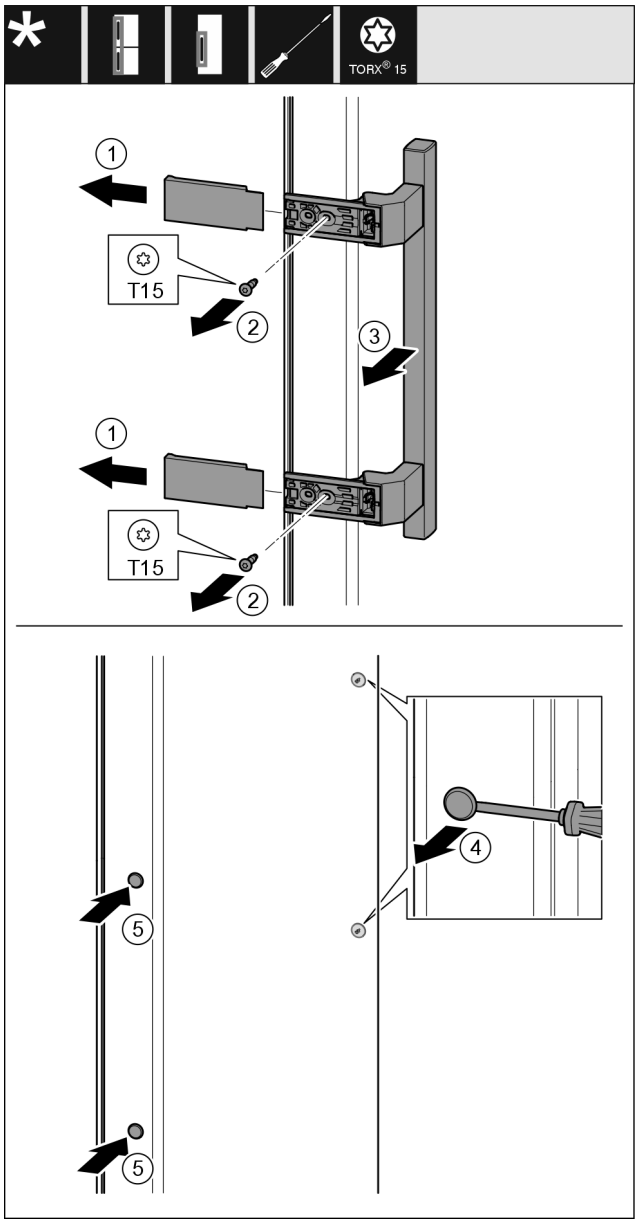


*Fig. 10*

- ▶ Pull off the cover. *Fig. 10 (1)*
- ▶ Unscrew the screws with a Torx 15 screwdriver. *Fig. 10 (2)*
- ▶ Take off the handle. *Fig. 10 (3)*
- ▶ Carefully lift the side plug with a slotted screwdriver and pull it out. *Fig. 10 (4)*
- ▶ Replace the plug on the other side. *Fig. 10 (5)*

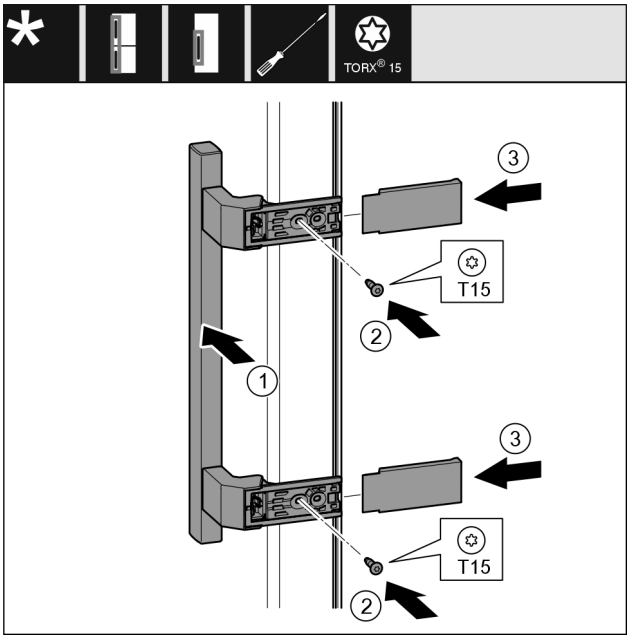


*Fig. 11*

- ▶ Attach the handle on the opposite side. *Fig. 11 (1)*
- ▷ The screw holes must be exactly on top of each other.
- ▶ Tighten screws with screwdriver T15. *Fig. 11 (2)*
- ▶ Place the covers on the side and push them on. *Fig. 11 (3)*
- ▷ Ensure that they latch into place.

### 3.8.5 Relocating the bearing components

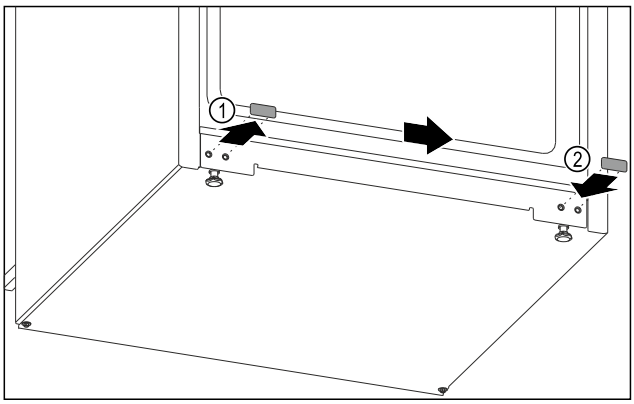


*Fig. 12*

- ▶ Carefully lift the cover plug at the bottom of the device with a slotted screwdriver.
- ▶ Pull out the cover plug. *Fig. 12 (1)*
- ▶ Insert the cover plug on the opposite side. *Fig. 12 (2)*

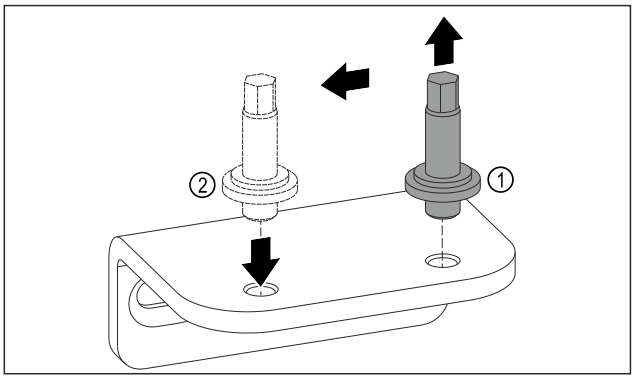


*Fig. 13*

- ▶ Unscrew the bolt of the lower swap bearing block with an Allen key AF5. *Fig. 13 (1)*
- ▶ Insert the bolt on the opposite side. *Fig. 13 (2)*
- ▶ Tighten the bolt with an Allen key AF5.

### 3.8.6 Relocating the upper bearing components

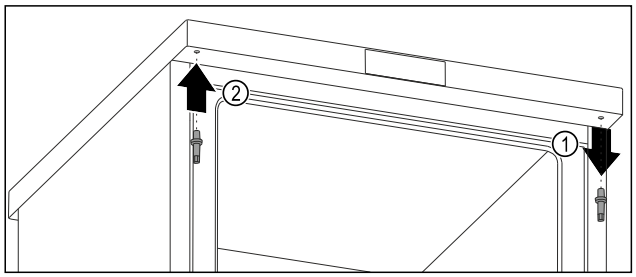


*Fig. 14*

- ▶ Unscrew the upper bolt with an Allen key. *Fig. 14 (1)*
- ▶ Tighten the bolt on the opposite side with an Allen key. *Fig. 14 (2)*

### 3.8.7 Fitting the door

**WARNING**

Danger of injury due to door falling out!
If the bearing parts are not screwed on tightly enough, the door may fall out. This can result in serious injuries. In addition, the door may not close with the result that the appliance does not cool properly.

- ▶ Screw the bearing brackets on firmly with 4 Nm.
- ▶ Check all screws and retighten them if necessary.

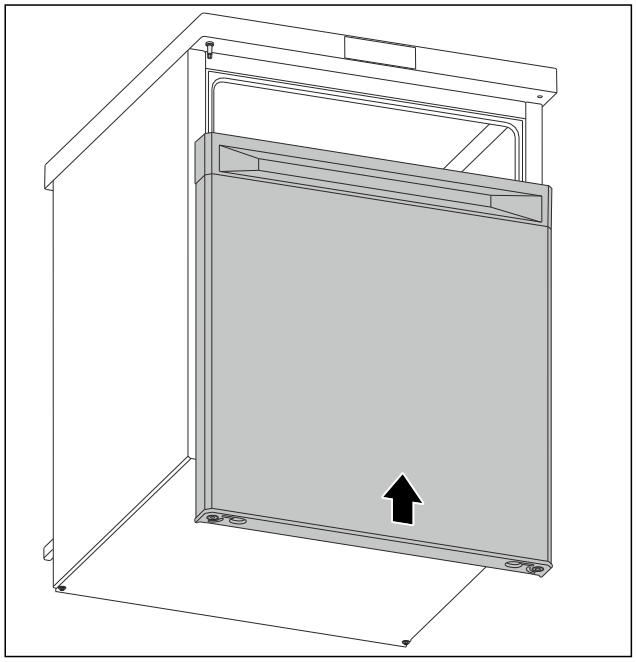

*Fig. 15*

- ▶ Slide the door onto the upper bolt in closed status. (see Fig. 15)

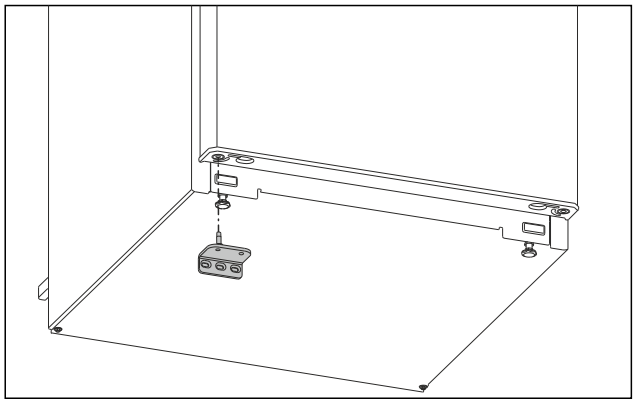

*Fig. 16*

- ▶ Insert the lower swap bearing block on the opposite side. (see Fig. 16)

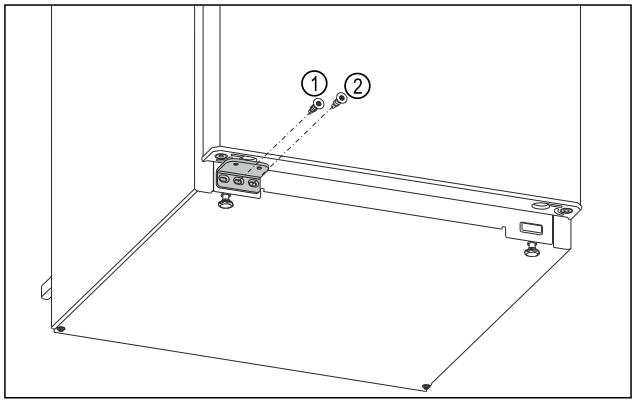


*Fig. 17*

- ▶ Tighten the middle screw of the swap bearing block *Fig. 17 (1)* with a Torx 20 screwdriver.
- ▶ Tighten the inner screw of the swap bearing block *Fig. 17 (2)* with a Torx 20 screwdriver.
- ▶ Check the door.
- ▷ The door hinge has been changed.

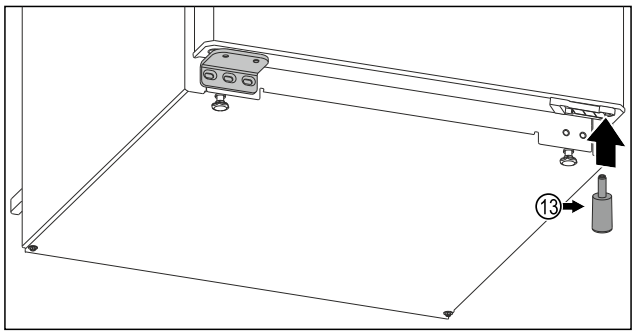


*Fig. 18 For appliances without a 4-star freezer compartment**

For appliances without a 4-star freezer compartment:*

- ▶ Insert the spacer *Fig. 18 (13)* back under the right-hand side of the door, as it is important for the stability of the appliance.*

## 3.9 Mounting wall spacers

With wall spacers, your device achieves the declared energy consumption and no condensation forms in high ambient humidity. The device is fully functional without the spacer brackets, but its energy consumption will be slightly higher.

If you insert the wall spacers, then the device depth increases by approx. 35 mm.

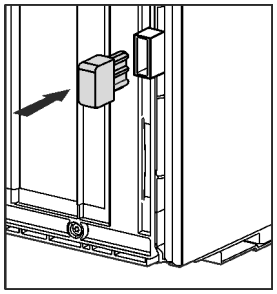

- ▶ Appliance with enclosed wall spacers: Insert the wall spacers on the rear of the appliance at the bottom left and right.

## 3.10 Setting up the appliance

**CAUTION**
Risk of injury due to heavy appliance!
▶ Have two people transport the appliance to its installation site.

**WARNING**
Risk of fire due to short circuit!
▶ When you set the appliance up: do not kink, jam or damage the mains cable.
▶ The appliance must not be operated with a defective mains cable.

**WARNING**
Fire hazard and danger of damage!
▶ Do not place appliances emitting heat e.g. microwaves, toasters etc. on the appliance!

Ensure that the following conditions are met:

❑ Only move the device when it is not loaded.
❑ Only install the appliance with help.

▶ Remove the mains cable from the package.
▶ Plug the mains cable's IEC socket completely into the appliance plug on the back of the appliance. Ensure that the IEC socket is tight.
▶ Use a cord to lay the mains plug to a freely accessible socket if required.

## 3.11 Installing multiple appliances

The appliances have been developed for different installation methods. If you wish to install several appliances next to each other or on top of each other, ensure that the following requirements are met:

❑ Only install appliances next to or on top of each other if they have been developed for this.
❑ Observe notices and the following table.

**NOTICE**
Risk of damage due to condensate!
▶ Do not place the appliance directly next to another cooling/refrigeration unit.

**NOTICE**
Risk of damage due to condensation!
▶ Do not place the appliance directly on top of another cooling/refrigeration unit.

| Model | Installation method |
|---|---|
| All models | Standalone |
| Models with a model designation starting with **S...**. | Side-by-Side (SBS) |
| Models without side wall heating | 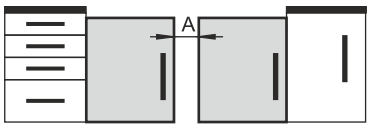<br>**Next to each other:** Install with gap **A** of 100 mm between the appliances.<br>If you do not comply with this gap, condensation will form on the side walls between the appliances.<br>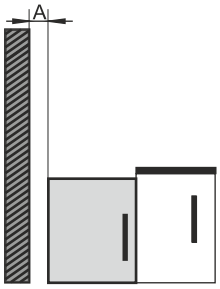<br>**On an exterior wall:** Install with gap **A** as with installation next to each other.<br>If you do not comply with this gap, condensation may form on the appliance's side wall. |

*Models and their installation method*

## 3.12 Sliding the appliance under a worktop

You can slide tabletop appliances with a maximum height of 850 mm under a continuous worktop.

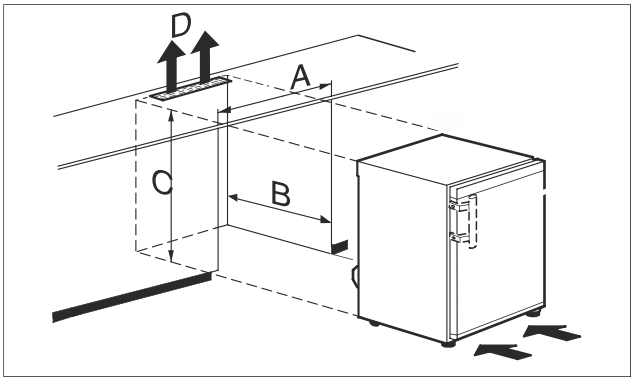


*Fig. 19*

**(A)** Width of appliance without table top
**(B)** Niche depth
**(C)** Niche height
**(D)** Ventilation cross-section in the workplate

| R..10.. | |
|---|---|
| **A** | 549 mm |
| **B** | at least 600 mm |
| **C** | 652 mm |
| **D** | at least 200 cm² |

| R..12.. | |
|---|---|
| **A** | 499 mm |
| **B** | at least 600 mm |
| **C** | 822 mm |

| R..12.. | |
|---|---|
| **D** | at least 200 cm² |

| R..14.. | |
|---|---|
| **A** | 549 mm |
| **B** | at least 600 mm |
| **C** | 822 mm |
| **D** | at least 200 cm² |

| R..16.. | |
|---|---|
| **A** | 599 mm |
| **B** | at least 600 mm |
| **C** | 822 mm |
| **D** | at least 200 cm² |

**WARNING**
Risk of fire due to short circuit!
▶ When you set the appliance up: do not kink, jam or damage the mains cable.
▶ The appliance must not be operated with a defective mains cable.

Ensure that the following requirements are met:
❑ The table top has been removed. (see 3.7 Removable table top)
❑ The socket is easily accessible and is not behind the appliance.
▶ Slide the appliance under the worktop.

## 3.13 After setting up

▶ Remove all transport safety fittings from the interior.

**NOTICE**
Damage to property caused by pointed or sharp objects!
Using pointed or sharp objects when removing packaging material may damage the appliance.
▶ Do not use any pointed or sharp objects to remove the packaging material.

▶ Remove protective films from the interior: Peel the film off flat along the surface of the component to minimise its adhesive force.
▶ Clean the appliance. (see 10.6 Cleaning the appliance)
▶ Note down the type (model, number), appliance name, appliance/serial number, date of purchase and retailer's address.

## 3.14 Connecting the appliance to the power supply

**WARNING**
Danger of electric shock and injury due to damaged appliance or damaged mains cable!
Danger of cuts and fatal injuries. If the appliance or the mains cable is damaged during transport, you may be electrocuted. You could also cut yourself on damaged parts of the appliance housing.
▶ Check the appliance and the mains cable for damage after transport.
▶ Never put the appliance into operation if the appliance or the mains cable are damaged.
▶ Contact Customer Service.

You can connect your appliance to the mains using the power cable supplied separately. The mains power cable has an appliance coupler at one end and a mains plug at the other end.

Make sure that the following requirements are fulfilled:
- The appliance and power cable are undamaged.
- The appliance is set up in accordance with the regulations. (see 3.9 Mounting wall spacers)
- Requirements for the electrical connection are met.
- Dimensions for connection in accordance with regulations are known and observed. (see 3.4 Connection dimensions for the power supply)
- Mains voltage and frequency correspond to the specifications on the type plate.
- The socket is earthed according to the regulations and fused.
- The fuse tripping current is between 10 A and 16 A.
- The socket is easily accessible and is not behind the appliance. (see 3.4 Connection dimensions for the power supply)

**NOTICE**
Danger of damage to incorrect operation!
Damage to the electrical components of the appliance.
▶ Only use the supplied mains cable.

**WARNING**
Danger of fire due to incorrect connection!
Burns.
Damage to the appliance.
▶ Do not use an extension cable.
▶ Do not use distributor blocks.

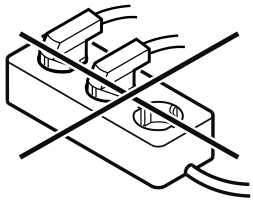

**NOTICE**
Danger of damage to incorrect connection!
Damage to the appliance.
▶ Do not connect the appliance to a stand-alone inverter, e.g. solar power systems and petrol generators.

▶ Connect the mains cable plug to the power supply. Ensure that the plug is tightly in the socket.
▷ The appliance is connected. For information regarding first use, see the following section or the operating instructions.

## 3.15 Disposing of packaging

**WARNING**
Danger of suffocation due to packing material and plastic film!
▶ Do not allow children to play with packing material.

The packaging is made of recyclable materials:
- corrugated board/cardboard
- expanded polystyrene parts
- polythene bags and sheets
- polypropylene straps
- nailed wooden frame with polyethylene panel*

▶ Take the packaging material to an official collecting point.

# 4 Functionality of the display

You operate your device with the touchbutton.

## 4.1 Navigation by touchbutton and symbol explanation

In the illustrations, different symbols are used to navigate the display by touchbutton. The following table describes these symbols.

| Symbol | Description |
|---|---|
|  | **Touch the touchbutton with your finger briefly:**<br>Navigate through main menu and submenu.<br>If a number is shown on the hand:<br>The number tells you how many times you have to touch the touchbutton briefly in succession to navigate to a particular function. |
|  | **Touch the touchbutton with your finger for 3 seconds:**<br>Switch on the device.<br>In the main menu: Switch off the device.<br>In the submenu: Switch to the main menu.<br>Deactivate active function of the submenu. |
|  | **Touch the touchbutton with your finger for 7 seconds:**<br>In the main menu: Open the submenu. |
|  | **Arrow with clock:**<br>It takes more than 10 seconds for the following message to appear in the display. |
| <br>2s 5s 10s | **Arrow with a time indication:**<br>It takes the specified amount of time until the following message appears in the display. |

## 4.2 Menus

The device functions can be found in various menus.

| Menu | Description |
|---|---|
| Main menu | When you switch the device on, you are automatically in the main menu.<br>From here, navigate to device functions and the submenu. |
| Submenu | The submenu contains additional device functions for setting up your device. |

### 4.2.1 Main menu

In the main menu, it is possible to activate/deactivate the following functions:

| LED | Description |
|---|---|
| <br>* | SuperCool* |
|  | Temperature 2 °C |
|  | Temperature 4 °C |
|  | Temperature 6 °C |
|  | Temperature 8 °C |

*Meaning of the LEDs in the main menu*

### 4.2.1 Opening the submenu

When you switch the device on, you are automatically in the main menu.

If you are in the submenu and want to switch to the main menu:
▶ Carry out action steps (see 4.2.2 Exiting the submenu) .

### 4.2.1 Navigating in the main menu

If you navigate in the main menu, LED 5 is followed by LED 1 again.



*Fig. 20*

▶ Touch the touchbutton briefly until the LED of the desired function lights up.
▷ Function is activated.

### 4.2.1 Sleep mode of the display

If you do not touch the touchbutton in the main menu for 10 seconds, the display switches to sleep mode. Sleep mode prevents you from adjusting the temperature by accidentally touching the touchbutton.

**Ending sleep mode:**




*Fig. 21*

▶ Briefly touch the touchbutton.
▷ Confirmation tone sounds.
▷ Set temperature flashes once.
▷ Sleep mode is ended.

### 4.2.2 Submenu

In the submenu, the following functions can be activated/deactivated:

| LED | Description | LED position |
|---|---|---|
|  | Input lock | LED 1 |
|  | SabbathMode | LED 2 |
|  | Resetting to factory settings | LED 3 |

*Meaning of the LEDs in the submenu*

### 4.2.2 Opening submenu

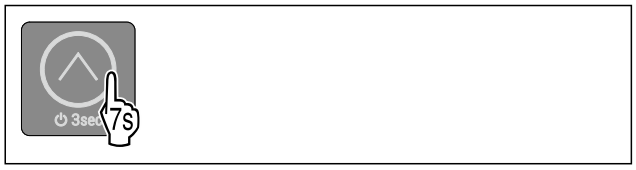


*Fig. 22*

▶ Carry out the steps as shown in the illustration until you hear a double confirmation tone after 7 seconds.
▷ LEDs 1-5 light up: You are in the submenu.
▷ If you do not perform any action on the display for 5 seconds, the display returns to the main menu.

### 4.2.2 Exiting the submenu




*Fig. 23*

▶ Carry out action steps according to the illustration.

**-or-**

▶ Do not touch the touchbutton for 5 seconds.

▷ You are in the main menu.

### 4.2.2 Navigating in the submenu

If you navigate in the submenu, LED 1 follows the LED of the last function in the submenu.




*Fig. 24*

▶ Touch the touchbutton briefly until the LED of the desired function lights up.
▷ After 5 seconds without interaction, selected function is automatically activated.

# 5 Putting into operation

## 5.1 Switching on device (first use)

Make sure that the following requirements are fulfilled:

❑ The device has been installed and connected in accordance with the installation instructions.
❑ All adhesive strips, adhesive and protective films and transport locks are removed from inside and on the device.
❑ All marketing leaflets are removed from the drawers.
❑ You are familiar with the functionality of the display. (see 4 Functionality of the display)

**Switching on the device:**

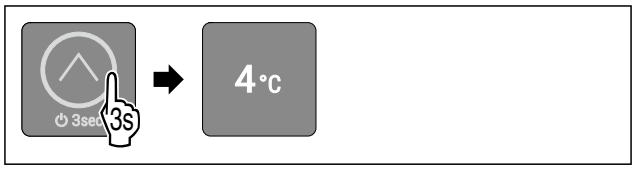


*Fig. 25*

▶ Touch the touchbutton as shown in the illustration for 3 seconds until you hear the confirmation tone.
▷ The device is switched on.
▷ Interior lighting is activated.
▷ The device cools to the target temperature set at the factory.

**Device starts in demo mode:**

When the device starts in demo mode:

▶ Deactivating demo mode. (see Deactivating demo mode)

**Display switches to sleep mode:**

When the display switches to sleep mode:

▶ Briefly touch the touchbutton. (see 4.2.1 Sleep mode of the display)

**Note**

The manufacturer recommends:

▶ Stock with food: Wait for around 6 hours until the set temperature is reached.
▶ **Store frozen foods** at -18 °C or colder.*
▶ Observe the notes on storing food. (see 6.1 Information regarding storage)

**Note**

Accessories can be purchased from the Liebherr-Hausgeräte store at go.liebherr.com/47wtc4.



*** Depending on model and options**

# 6 Storage

## 6.1 Information regarding storage

**WARNING**
Fire hazard from electrical appliances!
If you use electrical appliances in the food area of your appliance, they can cause a fire.
▶ Do not use electrical appliances in the food area of the appliance unless recommended by the manufacturer.

**Note**
The energy consumption increases and the cooling power goes down if ventilation is not sufficient.
▶ Always keep air slots clear.

Observe the following specifications for storage:
- In the freezer compartment: Package food properly.*
- Package or cover foods that readily take on or give off odours or taste in closed containers.
- Keep liquids in closed containers.
- Leave space between goods to ensure good air circulation.
- Store food according to the instructions on the packaging.
- Always observe the best-before date indicated on the packaging.

**Note**
Failure to follow these guidelines can lead to foodstuffs spoiling.

## 6.2 Fridge compartment

The air circulation in the appliance creates different temperature zones. You will find the different temperature zones in the appliance and equipment overview. (see 2.2 Overview of the appliance and equipment)

### 6.2.1 Arranging your food properly

▶ Upper area and door: Store butter, cheese, tinned food and tubes.

## 6.3 4-star freezer compartment*

Here, a dry, frosty storage climate is created at -18 °C. The frosty storage climate is suitable for storing frozen food for several months, for making ice cubes or freezing fresh food.

The air temperature in the freezer compartment, measured with a thermometer or other measuring device, may fluctuate. Temperature fluctuations are greater in a half-full or empty freezer and it is possible to attain temperatures warmer than -18 °C.

### 6.3.1 Freezing food

The maximum amount of fresh food that you can freeze within 24 hours is specified on the type plate (see 11.5 Model plate) under “Freezing capacity ... kg/24h”.

To ensure that food quickly freezes through, adhere to the following quantities per package:
- Fruit and vegetables up to 1 kg
- Meat up to 2.5 kg

**Arranging your food properly**

**CAUTION**
Risk of injury due to broken glass!
Bottles and cans containing drinks may burst when being frozen. This applies particularly to sparkling drinks.
▶ Do not freeze bottles and cans containing drinks!

▶ Place packaged food in the middle of the freezer compartment.

**Defrosting food**

**WARNING**
Risk of food poisoning!
▶ Do not re-freeze thawed food.
▶ Use defrosted foodstuff as soon as possible.

You can defrost food in several ways:
- In the fridge compartment
- In the microwave
- In the oven/fan-assisted oven
- At room temperature

▶ Take out only as much food as necessary.

## 6.4 Storage times

Refer to the specified storage times as a guide.

In the case of foods with a minimum shelf life, the date indicated on the packaging still applies.

### 6.4.1 Fridge section

Always follow the best-before date stated on the packaging.

### 6.4.2 Freezer compartment*

| Recommended shelf-lives for various types of food | | |
|---|---|---|
| Ice cream | at -18 °C | 2 to 6 months |
| Cold cuts, ham | at -18 °C | 2 to 3 months |
| Bread, baked goods | at -18 °C | 2 to 6 months |
| Game, pork | at -18 °C | 6 to 9 months |
| Fatty fish | at -18 °C | 2 to 6 months |
| Lean fish | at -18 °C | 6 to 8 months |
| Cheese | at -18 °C | 2 to 6 months |
| Poultry, beef | at -18 °C | 6 to 12 months |
| Vegetables, fruit | at -18 °C | 6 to 12 months |

# 7 Saving energy

- Pay attention to good ventilation. Do not cover ventilation holes or grids.
- Do not place the appliance in direct sunlight or near radiators or similar sources of heat.
- If the appliance is placed directly next to an oven, the energy consumption may increase slightly. This is dependent on the service life and usage intensity of the oven.
- Energy consumption depends on the installation conditions, e.g. the ambient temperature . A warmer ambient temperature can increase the energy consumption.
- Open the appliance for as short a time as possible.

- The lower the temperature is set the higher the energy consumption.
- Sort your food: home.liebherr.com/food.
- Keep all food properly packed and covered. This prevents frost from forming.
- Only take food out for as long as necessary so that it doesn't warm up too much.
- Inserting warm food: allow to cool down to room temperature first.
- Thaw frozen food in the refrigerator.*
- If there is a thick layer of frost in the appliance: defrost the appliance.*
- If you intend to be on holiday for a long time empty the refrigerator and switch it off.

Dust deposits increase energy consumption:

- For refrigerators with heat exchangers dust the metal grid on the back of the appliance once a year.

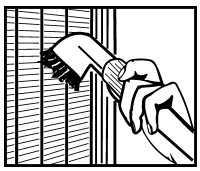

# 8 Controls

## 8.1 Operating controls and display elements

The display provides a quick overview of the current status of the appliance, the temperature setting, the status of functions and messages.

You operate your appliance with the touchbutton.

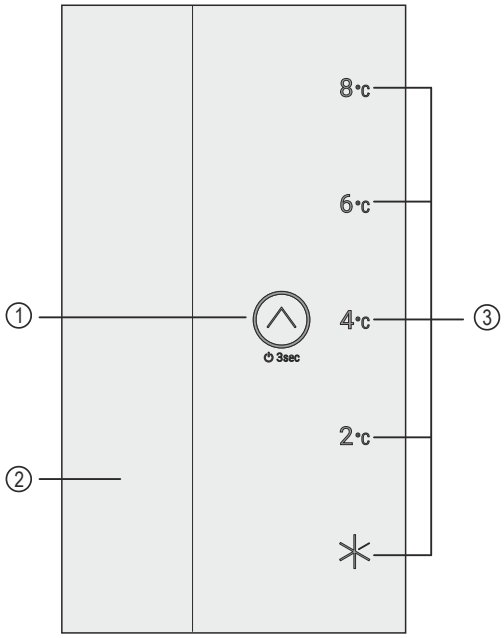


*Fig. 26 Example illustration: Display*

**(1)** Touchbutton (operating control)
**(2)** Interior lighting
**(3)** Temperature display/ Status indicator

### 8.1.1 Temperature display/Status indicator

The temperature display/status indicator consists of five LEDs:

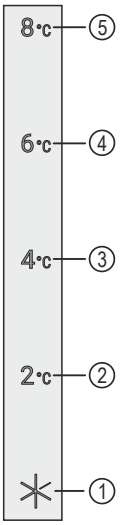


*Fig. 27 Example illustration*

**(1)** LED 1
**(2)** LED 2
**(3)** LED 3
**(4)** LED 4
**(5)** LED 5

The LEDs indicate temperature settings (see 4.2.1 Main menu) in the main menu and functions in the submenu (see 4.2.2 Submenu) .

### 8.1.2 LED behaviour

You can recognise the status of the device by the light up or flashing of the LEDs:

| LED behaviour (example illustration) | Description |
|---|---|
|  | **LED does not light up:** LED is not selected. Function is not active. |
|  | **LED lights up:** LED is selected or function is active. |
| 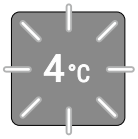 | **Several LEDs flash simultaneously:** An error has occurred. (see 8.3 Messages) |

*LED behaviour*

### 8.1.3 Audible signals

An audible signal sounds in the following cases:

| Audible signal | Description |
|---|---|
| Confirmation tone | Sounds when the touchbutton is touched. |
| Alarm tone | Sounds when an error occurs. (see 8.3 Messages) |
| Error tone | Sounds when the touchbutton is touched, but the interaction is not possible. |



*** Depending on model and options**

## 8.2 Appliance functions

### 8.2.1 Notes on the appliance functions

The appliance functions are set at the factory so that your appliance is fully functional.

Before you alter, activate or deactivate the device functions, make sure that the following requirements are met:

- ❑ You have read and understood the descriptions of how the display works. (see 4 Functionality of the display)
- ❑ You have familiarised yourself with the operating and display elements of your appliance. (see 8.1 Operating controls and display elements)

### Switching the appliance off and on

Use this function to switch the entire appliance off and on.

**Switching off the device**

When you switch the appliance off, then the previously saved settings are saved.

Make sure that the following requirements are fulfilled:

- ❑ Handling instructions (see 12 Shutting down) are carried out.
- ❑ You are in the main menu. (see 4.2.2 Exiting the submenu)

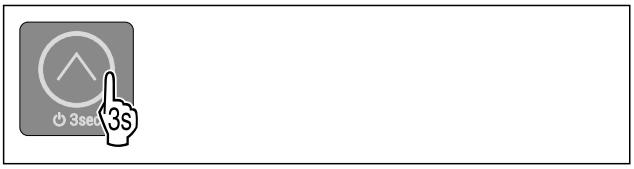


*Fig. 28*

▶ Carry out the action steps according to the illustration until you hear the confirmation tone.
▷ LEDs of the display no longer light up.
▷ Interior lighting is deactivated.
▷ Device is switched off.

**Switching on the device**

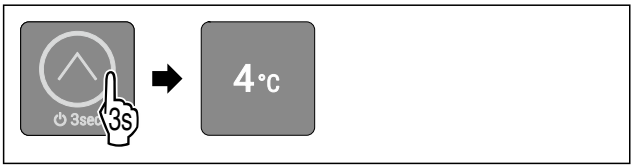


*Fig. 32 Example illustration: On appliances without a SmartModule*

▶ Carry out the action steps according to the illustration until you hear the confirmation tone.
▷ The device is switched on.
▷ Interior lighting is activated.
▷ During first use: The appliance cools to the target temperature set at the factory.
▷ If the device has been in operation before: The appliance cools to the target temperature set previously.

### 5 °C Temperature

Use this function to set the temperature.

The temperature depends on the following factors:

- Frequency of door opening
- Duration of door opening
- Room temperature of the installation site
- Type, temperature and quantity of food

Recommended setting: 4 °C

**Setting the temperature**

The function is located in the main menu on the positions of LEDs 2-5.

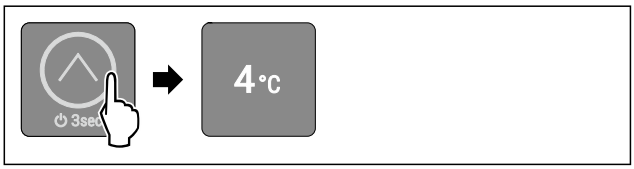


*Fig. 34 Example illustration*

▶ Briefly touch the touchbutton as shown until the desired temperature lights up.
▷ Temperature is set.
▷ The device cools to the target temperature set.

### SuperCool*

You can use this function to activate or deactivate SuperCool. If SuperCool is activated, then the appliance increases the cooling capacity. It allows you to achieve lower cooling temperatures. You can activate SuperCool when you would like to cool a large quantity of food quickly.

If SuperCool is activated, then lower temperatures are reached in the **** freezer compartment. You can activate SuperCool when you would like to freeze food in the **** freezer compartment.*

**Activating SuperCool**

The function is located in the main menu at the position of LED 1.

Time for activation of the function:

- When you would like to store fresh food in the fridge section: Activate the function when inserting food.
- When you would like to store fresh food in the **** freezer compartment: Activate the function when inserting food.*

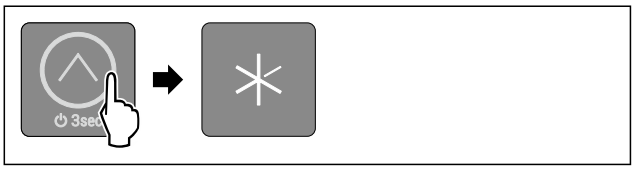


*Fig. 35*

▶ Briefly touch the touchbutton as shown until LED 1 lights up.
▷ LED 1 lights up: SuperCool is activated.
▷ The device cools to the target temperature.

**Deactivating SuperCool**

For appliances with **** freezer compartment: SuperCool is automatically deactivated after 56 to 72 hours.*

For appliances without **** freezer compartment: SuperCool is deactivated automatically after 18 hours.*

However, you can also deactivate SuperCool manually at any time by setting a temperature:

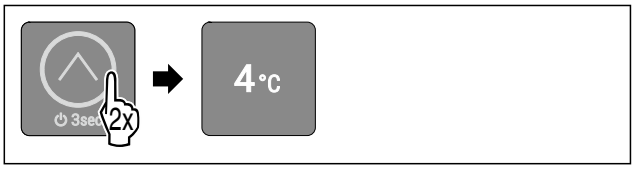


*Fig. 36 Example illustration*

▶ Briefly touch the touchbutton as shown until the desired temperature lights up.
▷ Temperature is set and SuperCool is deactivated.

▷ The appliance continues to run in normal mode.
▷ The device cools to the target temperature set.

## SabbathMode

With this function you activate or deactivate the SabbathMode. If you activate this function, some electronic functions are switched off. As a result, your device meets the religious requirements for Jewish holidays such as Sabbath and complies with STAR-K Kosher certification.

| Device status when SabbathMode is active |
|---|
| LEDs 1-5 light up. |
| All functions in the display are locked except for the **Deactivating SabbathMode function**. |
| Active functions remain active. |
| The interior lighting is deactivated. |
| Messages are not displayed. |
| There is no door alarm. |
| After a power failure, the device returns to SabbathMode. |

*Device status*

**Note**
This appliance has certification from the “Institute for Science and Halacha”. (www.machonhalacha.co.il)

You can find a list of STAR-K-certified appliances at www.star-k.org/appliances.

### Activating SabbathMode

**WARNING**
Danger of food poisoning from spoiled food!
If you have SabbathMode activated and a power failure occurs, no message appears in the status display about the power failure. Once the power is restored, the appliance continues to operate in SabbathMode. The power failure may mean that food spoils and the consumption of this food could lead to food poisoning.
After a power failure:
▶ Do not consume food that was frozen and has thawed out.

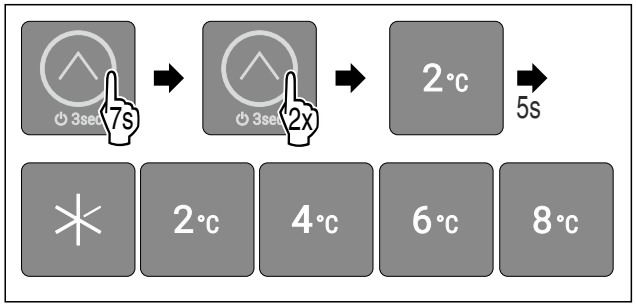


*Fig. 37*

▶ Carry out action steps according to the illustration.
▷ LED 2 lights up.
▷ After 5 seconds without interaction, SabbathMode is activated. LEDs 1-5 light up.

### Deactivating SabbathMode

The SabbathMode is automatically deactivated after 80 hours. However, you can also deactivate SabbathMode manually at any time:

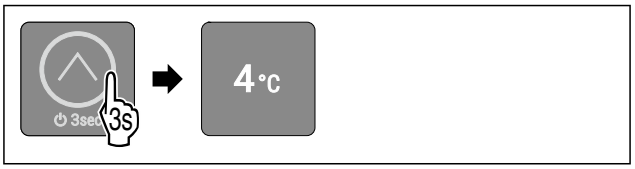


*Fig. 38 Example illustration depending on the previously set temperature*

▶ Carry out the action steps according to the illustration until you hear the confirmation tone.
▷ SabbathMode is deactivated.
▷ Interior lighting is activated.
▷ The device continues to run in normal mode. LED of the previously set temperature lights up.
▷ You are in the main menu.

## Input lock

You can use this function to activate or deactivate the input lock. The input lock prevents the appliance being operated accidentally, e. g. by children.

Application:
- Avoid unintentional modification of functions.
- Avoid unintentional switching off of the device.
- Avoid unintentional temperature setting.

### Activating the input lock

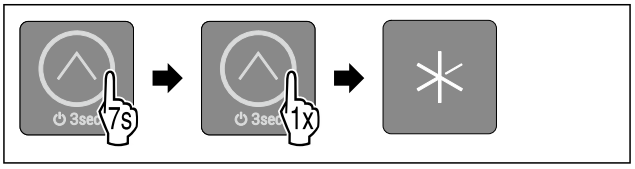


*Fig. 39*

▶ Carry out action steps according to the illustration.
▷ LED 1 lights up.
▷ After 5 seconds without interaction, input lock is automatically activated.

### Deactivating the input lock




*Fig. 40*

▶ Carry out the action steps according to the illustration until you hear the confirmation tone.
▷ Input lock is deactivated.
▷ You are in the main menu.

## Demo mode

Demo mode is a special feature for dealers who want to demonstrate device features. If you activate demo mode, all refrigeration functions are deactivated and you cannot open the submenu.

If you activate and then deactivate demo mode, the device will be reset to factory defaults. (see  Resetting to factory settings)

**Activating demo mode**

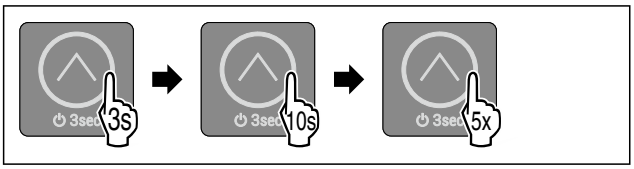


*Fig. 41*

▶ Touch the touchbutton as shown in the illustration for 3 seconds until you hear the confirmation tone.
▷ Device is switched off.
▶ Touch the touchbutton as shown in the illustration for 10 seconds until you hear the confirmation tone after 10 seconds.
▶ Briefly touch the touchbutton five times.
▷ All temperature LEDs light up twice for a short time: Demo mode is activated.
▷ Device is switched off.
▶ Switch on the device. (see Switching on the device)
▷ The device is in demo mode.

**Deactivating demo mode**

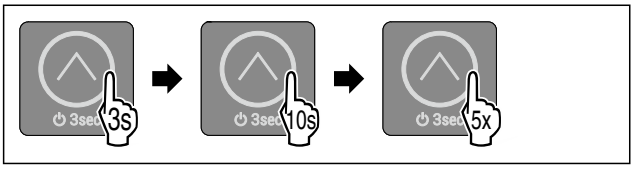


*Fig. 42*

▶ Touch the touchbutton as shown in the illustration for 3 seconds until you hear the confirmation tone.
▷ Device is switched off.
▶ Touch the touchbutton as shown in the illustration for 10 seconds until you hear the confirmation tone after 10 seconds.
▶ Briefly touch the touchbutton five times.
▷ All temperature LEDs light up briefly four times: Demo mode is deactivated.
▷ Device is switched off.
▶ Switch on the device. (see Switching on the device)

### Resetting to factory settings

Use this function to reset all settings to factory defaults. All settings you have made so far (e.g. log-in data) are reset to their original settings.

Application:

- Reset device

**Performing a reset**

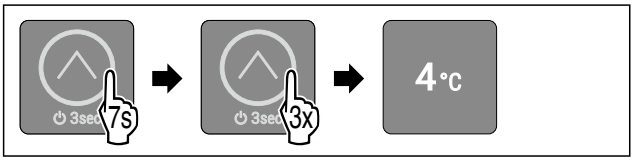


*Fig. 43 Example illustration*

▶ Carry out action steps according to the illustration.
▷ LED 3 lights up.
▷ After 5 seconds without interaction, the appliance is reset.
▷ Appliance is switched off.
▶ Switch on the appliance. (see 5.1 Switching on device (first use))
▷ Log-in data is reset.

## 8.3 Messages

Messages are indicated audibly by an alarm tone and visually by the LEDs flashing in the display. Different LEDs flash depending on the type of message.

You can end the following messages yourself. For all other messages, you must contact the customer service. (see 11.4 Customer Service)

| Message | Cause | Exit the message |
|---|---|---|
| The alarm tone sounds at an ever-increasing volume.<br>Interior lighting pulses.<br>**Door alarm** | The message appears if the door is open for more than 60 seconds. | Carry out action steps (see Door alarm) . |

*Overview of messages*

### 8.3.1 Ending messages

**Door alarm**

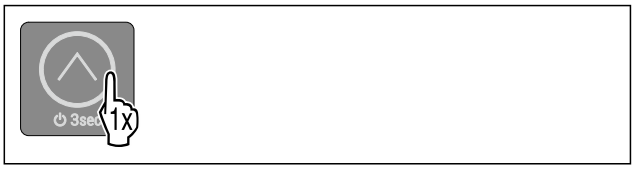


*Fig. 44*

▶ End alarm: Carry out action steps according to the illustration.

**-or-**

▶ Close the door.

▷ Alarm has ended.
▷ If the door is not closed: Message appears again after 3 minutes.

# 9 Features

## 9.1 4-star freezer compartment*

### 9.1.1 Opening the 4-star freezer compartment

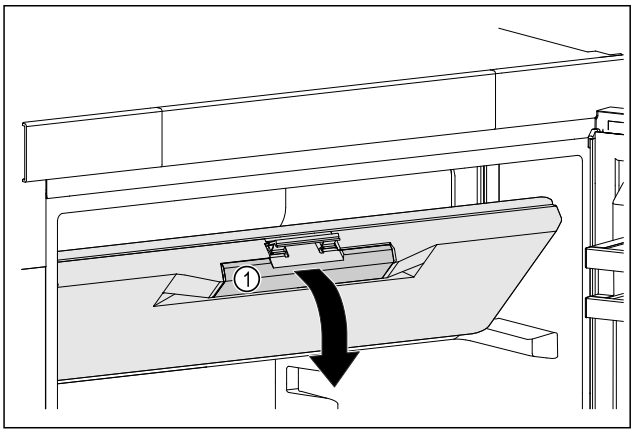


*Fig. 45*

▶ Hold the freezer compartment door by the recessed handle *Fig. 45 (1)*.
▶ Pull the freezer compartment door down and forward.
▷ Freezer door is open.

### 9.1.2 Closing the 4-star freezer compartment

▶ Close the freezer compartment door.

▶ Press on the freezer compartment door at the front until it engages.
▷ Freezer compartment door is closed.

## 9.2 Door rack

Door racks are suitable for storing drinks and food. You can move door racks for your own individual use and take them apart for cleaning. However, Liebherr recommends using the door racks in the position in the door as delivered from the factory.

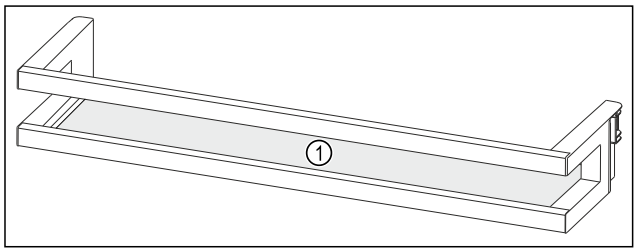


*Fig. 46 Example illustration, Door rack*
**(1)** Shelf

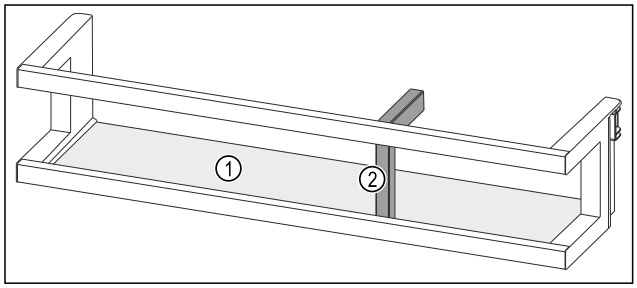


*Fig. 47 Example illustration, Door rack with bottle holder*
**(1)** Shelf **(2)** Bottle holder

The following table shows examples of what can be stored in each door rack.

| Door rack | Food |
|---|---|
| Door rack (see Fig. 46) | Butter, cheese, tinned food, tubes |
| Door rack with bottle holder (see Fig. 47) | Bottles<br>The sliding bottle holder secures the bottles in the door rack. |

### 9.2.1 Removing the door rack

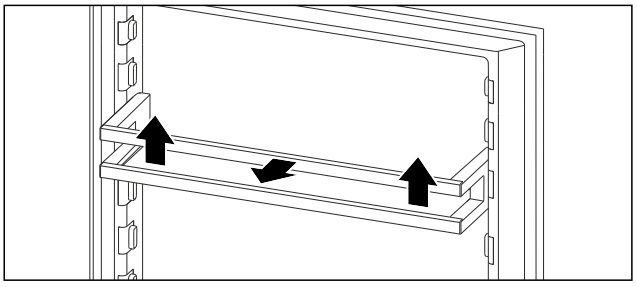

*Fig. 48 Example illustration*
▶ Push the door rack upwards.
▶ Pull the door rack forward.

### 9.2.2 Inserting the door rack

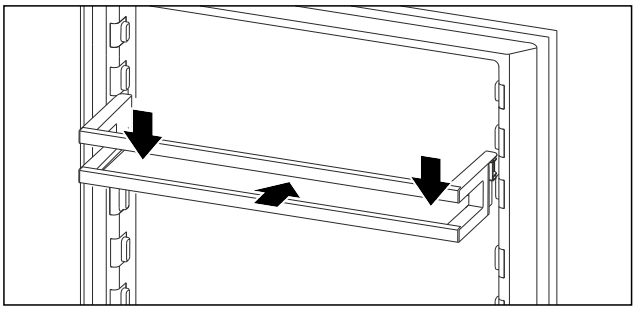

*Fig. 49 Example illustration*
▶ Slide in the door rack.
▶ Press the door rack down.

## 9.3 Drawers

You can remove the drawers for cleaning.

The way to remove/insert the drawers varies depending on the pull-out system. Your appliance can contain various pull-out systems.

**Note**
The energy consumption increases and the cooling power goes down if ventilation is not sufficient.
▶ Always keep the inside vents at the rear wall clear.

### 9.3.1 Drawer on appliance base or glass shelf

The drawer runs directly on the appliance base or on a glass shelf. There are no rails.

**Removing drawer**

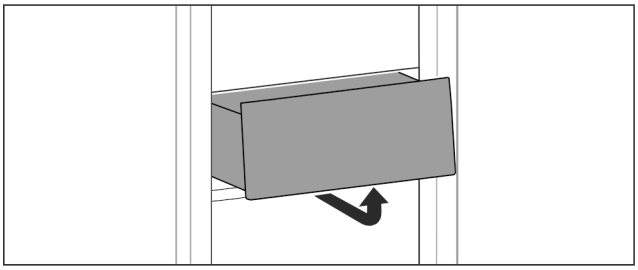

*Fig. 50*
▶ Remove drawer as shown in the illustration.

**Inserting drawer**

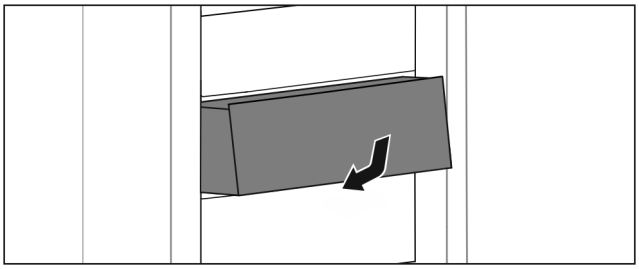

*Fig. 51*
▶ Insert drawer as shown in the illustration.

The compartment lid ensures constant levels of humidity.

The compartment lid is directly on the drawer and can be covered by shelves or additional drawers.

## 9.5 Butter dish

### 9.5.1 Opening/closing the butter dish

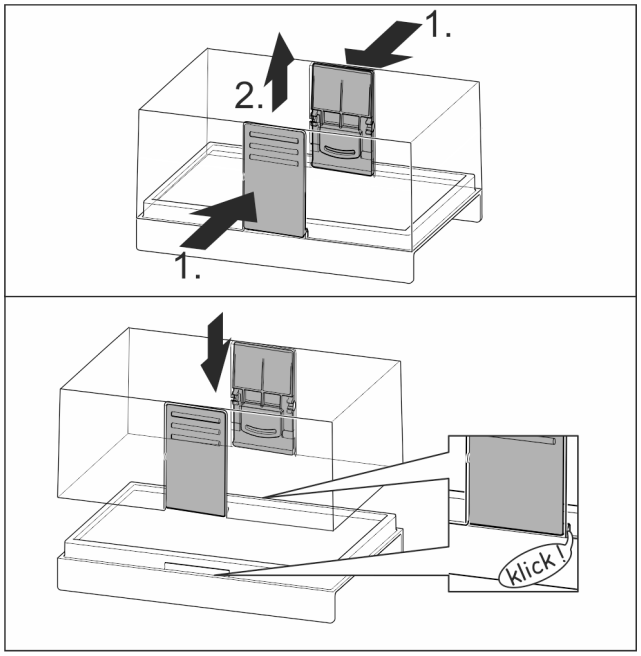


*Fig. 52*

### 9.5.2 Dismantling the butter dish

You can take the butter dish apart for cleaning.

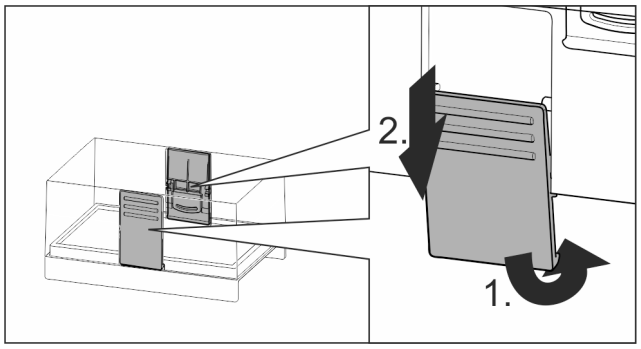


*Fig. 53*

▶ Disassembling the butter dish.

## 9.6 Egg rack*

You can pull out and turn the egg rack. You can use both sides of the egg rack so you can label specifics like the purchase date.

### 9.6.1 Using the egg rack

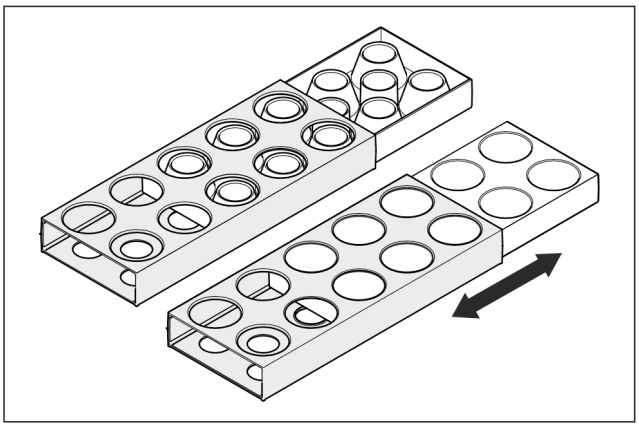

*Fig. 54*

▶ Top layer: for storing hen eggs.
▶ Bottom layer: for storing quail eggs.

## 9.7 Bottle holder

### 9.7.1 Using the bottle holder

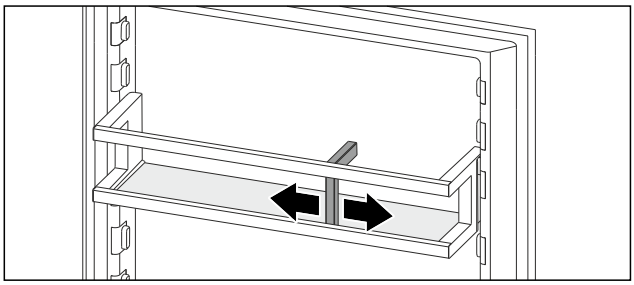

*Fig. 55*

▶ Push the bottle holder onto the bottles.
▷ The bottles are prevented from falling over.

# 10 Maintenance

## 10.1 Dismantling the door rack

It is possible to dismantle some of the door racks if you want to clean them or install or remove spare parts.

### 10.1.1 Dismantling the door rack

Ensure that the following requirements are met:

❑ Door rack has been removed. (see 9.2.1 Removing the door rack)

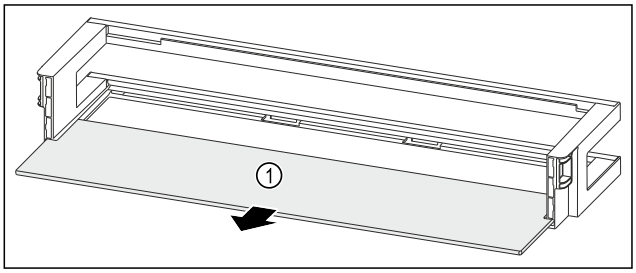


*Fig. 56 Door rack with shelf*

▶ Remove the shelf *Fig. 56 (1)*.

### 10.1.2 Dismantling the door rack with bottle holder

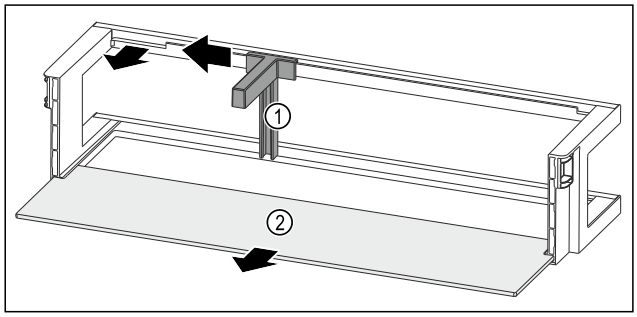


*Fig. 57 Door rack with bottle holder and shelf*

- ▶ Slide the bottle holder *Fig. 57 (1)* to the side as far as the recess.
- ▶ Remove the bottle holder *Fig. 57 (1)*.
- ▶ Remove the shelf *Fig. 57 (2)*.

## 10.2 Assembling the door rack

### 10.2.1 Assembling the door rack

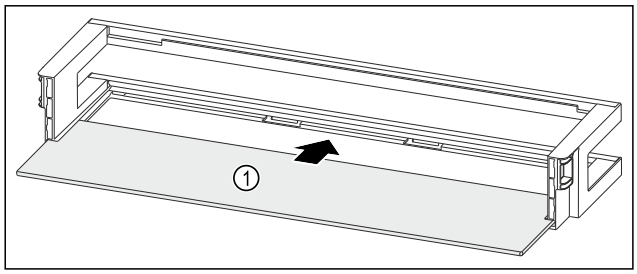


*Fig. 58 Door rack with shelf*

- ▶ Push the shelf *Fig. 58 (1)* into the side recesses.

### 10.2.2 Assembling the door rack with bottle holder

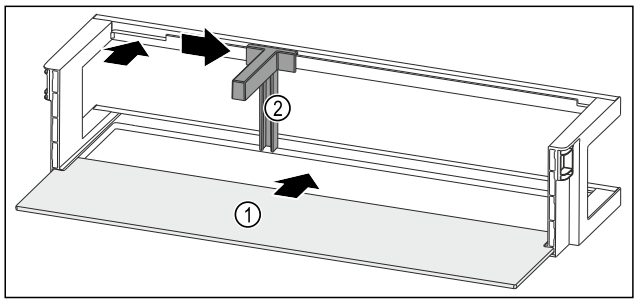


*Fig. 59 Door rack with shelf*

- ▶ Push the shelf *Fig. 59 (1)* into the side recesses.
- ▶ Insert the bottle holder *Fig. 59 (2)* in the recess.
- ▶ Push the bottle holder *Fig. 59 (2)* to the desired position to the side.

## 10.3 Disassembling / assembling pull-out systems

### 10.3.1 Notes on disassembly

You can disassemble some of the pull-out systems for cleaning. Your appliance can contain a variety of pull-out systems.

The following pull-out systems can be disassembled or cannot be disassembled:

| | |
|---|---|
| Pull-out system | can be disassembled / cannot be disassembled |
| Drawer on appliance base or glass shelf | cannot be disassembled |

## 10.4 Defrosting the appliance

**WARNING**
Improper defrosting of the appliance!
Injuries and damage.

- ▶ Do not use mechanical equipment or other methods to speed up the defrosting process other than those recommended by the manufacturer.
- ▶ Do not use electrical heating or steam-cleaning appliances, naked flames or defroster sprays to defrost.
- ▶ Do not use sharp objects to remove ice.

Defrosting is performed automatically. The water from the thawing process drains through the outlet and evaporates.

Water drops or a thin layer of frost or ice can form on the back wall; this is a completely normal part of the appliance's function. This must not be removed.

A layer of frost or ice can from briefly due to the energy-optimised control of the device.

- ▶ Clean the drain opening at regular intervals. (see 10.6 Cleaning the appliance)

## 10.5 Defrosting the freezer compartment manually*

A layer of frost or ice forms after prolonged use.

The following factors promote the formation of frost or ice:

- The appliance is opened frequently.
- Hot food is put in.

- ▶ Switch the appliance off.
- ▶ Pull the mains plug out of the socket or switch the fuse off.
- ▶ Wrap the frozen food in newspaper or blankets and store in a cool place.



- ▶ Place a saucepan of hot but not boiling water in the freezer compartment.
- ▷ This speeds up the defrosting process.
- ▶ Leave the compartment and appliance door open during defrosting.
- ▶ Remove loosened pieces of ice.
- ▶ Soak up the melted ice water with a sponge or cloth several times as necessary.
- ▶ Clean the appliance. (see 10.6 Cleaning the appliance)

## 10.6 Cleaning the appliance

### 10.6.1 Preparation

**WARNING**
Danger of electric shock!

- ▶ Remove the refrigerator connector or interrupt the power supply.

**WARNING**
Danger of fire!
▶ Do not damage the refrigeration circuit.

▶ Empty the appliance.
▶ Unplug the mains plug.

### 10.6.2 Clean the housing

**NOTICE**
Improper cleaning!
Damage to the appliance.
▶ Only use soft cleaning cloths and ph-neutral all-purpose cleaners.
▶ Do not uses abrasive sponges or steel wool which may cause scratches.
▶ Do not use any sharp or abrasive cleaning agents, nor any that contain sand, chloride or acid.

**WARNING**
Risk of injury and damage as a result of hot steam!
Hot steam can lead to burns and can damage the surfaces.
▶ Do not use any steam cleaners!

▶ Wipe the housing down with soft, clean cloth. If very dirty, use lukewarm water with a neutral cleaner. Glass surfaces can also be cleaned with glass cleaner.

### 10.6.3 Cleaning the interior

**NOTICE**
Improper cleaning!
Damage to the appliance.
▶ Only use soft cleaning cloths and ph-neutral all-purpose cleaners.
▶ Do not uses abrasive sponges or steel wool which may cause scratches.
▶ Do not use any sharp or abrasive cleaning agents, nor any that contain sand, chloride or acid.

▶ Plastic surfaces: clean by hand with a soft clean cloth, lukewarm water and a little detergent.
▶ Metal surfaces: clean by hand with a soft clean cloth, lukewarm water and a little detergent.
▶ Drain hole: remove deposits using a thin item (for example a cotton bud).

### 10.6.4 Clean the components

**NOTICE**
Improper cleaning!
Damage to the appliance.
▶ Only use soft cleaning cloths and ph-neutral all-purpose cleaners.
▶ Do not uses abrasive sponges or steel wool which may cause scratches.
▶ Do not use any sharp or abrasive cleaning agents, nor any that contain sand, chloride or acid.

**Clean with a soft, clean cloth, lukewarm water and some detergent:**

- Dividing shelf*
- Drawer

**Wash in the dishwasher up to 60 °C:**

- Door rack
- Bottle rack
- Holder of the dividing shelf*
- Egg rack*
- Butter dish

▶ To disassemble components: see the relevant section.
▶ Clean the components.

### 10.6.5 After cleaning

▶ Wipe the appliance and the components dry.
▶ Connect and switch on the appliance.
The temperature is cold enough:
▶ Place the food inside.
▶ Repeat cleaning regularly.

# 11 Customer help

## 11.1 Technical specifications

| Temperature range | |
|---|---|
| Cooling | If your appliance has a display with a 2 °C, 4 °C, 6 °C, 8 °C temperature indicator, the temperature range is: 2 °C to 8 °C.<br>If your appliance has a display with a 3 °C, 5 °C, 7 °C, 9 °C temperature indicator, the temperature range is: 3 °C to 9 °C. |

| Maximum ice cube quantity / 24 hours | |
|---|---|
| Freezer compartment* | see type plate under “Freezing capacity .../ 24 h” * |

| Lighting | |
|---|---|
| Class[1] | Light source |
| This product contains one or more energy efficiency class G light sources. | LED |

[1] *The appliance may contain light sources with different energy efficiency classes. The lowest energy efficiency class is indicated.*

## 11.2 Operating noise

The appliance makes different noises when it is on.

- At **higher temperatures** the appliance uses less energy but works for longer. It is **quieter**.
- With **high cooling capacity**, food is cooled more quickly. The sound is **louder**.

Examples:

- Functions on (see 8.2 Appliance functions)
- Food recently added
- High ambient temperature
- Door open for a while

| Noise | Possible cause | Type of noise |
|---|---|---|
| Bubbling and splashing | Coolant flowing into the cooling circuit. | Normal operating noise |
| Hissing | Coolant sprays into the cooling circuit. | Normal operating noise |
| Humming | The appliance is cooling. The volume depends on the cooling output. | Normal operating noise |

| Noise | Possible cause | Type of noise |
|---|---|---|
| Clicking | Components are switched on and off. | Normal switching noise |
| Rattling or humming | Valves or flaps are working. | Normal switching noise |

| Noise | Possible cause | Type of noise | Lifting |
|---|---|---|---|
| Vibration | Improper setup | Defective noise | Level the appliance using the adjustable feet. |
| Rattling | Components, items inside the appliance | Defective noise | Secure components. Leave enough space between the items. |

## 11.3 Technical fault

Your appliance is designed and built to ensure it works reliably and has a long service life. In the unlikely event that a fault occurs during operation, please check whether it is due to an operating error. If so, you will be charged for the callout and repair costs even if it falls within the warranty period.

You can fix the following faults yourself.

### 11.3.1 Appliance function

| Defect | Cause | Remedy |
|---|---|---|
| **The appliance is not working.** | → The appliance is not switched on. | ▶ Switch the appliance on. |
| | → The power plug is not properly plugged into the socket. | ▶ Check the power plug. |
| | → There is something wrong with the power outlet fuse. | ▶ Check the fuse. |
| | → Power cut | ▶ Keep the appliance closed.<br>▶ Safeguarding food: Place cold packs on top of food or use another freezer if the power cut lasts longer.* |
| | → The IEC socket is not plugged into the appliance correctly. | ▶ Check the IEC socket. |
| **Temperature is not cold enough.** | → The appliance door is not closed properly. | ▶ Close the appliance door. |
| | → Not enough ventilation. | ▶ Keep ventilation grille clear, and clean it. |
| | → The ambient temperature is too high. | ▶ Problem solution: (see 1.8 Climate classes) |
| | → The appliance was opened too many times or for too long. | ▶ Wait to see if the required temperature corrects itself. If not, contact Customer Service. (see 11.4 Customer Service) |
| | → The temperature is set incorrectly. | ▶ Turn down the temperature and check after 24 hours. |
| | → The appliance is too close to a heat source (oven, radiator, etc). | ▶ Move the appliance or the heat source. |
| **Appliance functions SabbathMode, EnergySaver, SuperFrost or PartyMode cannot be activated.** | → TruAdapt is active. TruAdapt is a function that automatically optimises the device's operation and is always active in the background. | ▶ Reactivate the functions after 1–2 hours. |
| **The appliance is making more noise than usual, or the noise won't stop.** | → The appliance temporarily increases its cooling capacity to bring newly stored food up to the optimum storage temperature more quickly. Frequent opening of the door can also lead to louder noises. | ▶ No action required. The appliance is working correctly. |

| Defect | Cause | Remedy |
|---|---|---|
| | As a result, operating noise may be audible for a longer period of time. This is normal and does not indicate a fault. The additional cooling helps to ensure food is stored in the best possible conditions. | |
| **Frost on the drawers in the freezer compartment or in the freezer section** | → The appliance door has been opened frequently or left open for a long time. This allows more moist air to enter the appliance, which can condense as frost on the drawers. In this case, the automatic defrost function takes longer to remove the frost. This does not affect the storage of the food. | ▶ Increase the temperature inside the appliance. |
| **The door seal is defective or needs to be replaced for another reason.** | → The door seal can be replaced. It can be replaced without the need for special tools. | ▶ Contact Customer Service. (see 11.4 Customer Service) |
| **The appliance builds up too much ice or condensation.** | → The door seal may have slipped out of its groove. | ▶ Check that the door seal is well fitted in the groove. |

### 11.3.2 Features

| Defect | Cause | Remedy |
|---|---|---|
| **The internal light does not come on.** | → The appliance is not switched on. | ▶ Switch the appliance on. |
| | → The door was open for longer than 15 minutes. | ▶ Interior lighting switches off automatically after about 15 minutes when the door is open. |
| | → The LED interior light is faulty or the lid is damaged. | ▶ Contact Customer Service. (see 11.4 Customer Service) |
| **The freezer compartment cannot be closed.*** | → The lock is on when the door is open. | ▶ Use the handle again. |

## 11.4 Customer Service

First check whether you can rectify the fault yourself (see 11 Customer help) . If you cannot rectify the problem, contact Customer Service.

You can find the address in the enclosed brochure “Liebherr-Service” or at home.liebherr.com/service.

**WARNING**
Unprofessional repair!
Injuries.
- ▶ Have any repairs and action - not expressly specified - on the appliance and mains cable carried out by service personnel only. (see 10 Maintenance)
- ▶ A damaged mains cable may only be replaced by the manufacturer, the manufacturer’s Customer Service or a similarly qualified person.
- ▶ In the case of appliances with an IEC connector, the change may be made by the customer.

### 11.4.1 Contacting Customer Service

Make sure that the following appliance information is available:
- ❑ Appliance designation (model and index)
- ❑ Service no. (Service)
- ❑ Serial no. (S no.)

- ▶ Refer to the type plate for device information. (see 11.5 Model plate)
- ▶ Note down the appliance information.
- ▶ Notify customer service: Report errors and the appliance information.
- ▷ This will help us to provide you with a faster, more accurate service.
- ▶ Follow further instructions from Customer Service.

## 11.5 Model plate

The type plate is located on the bottom left of the inside of the appliance.

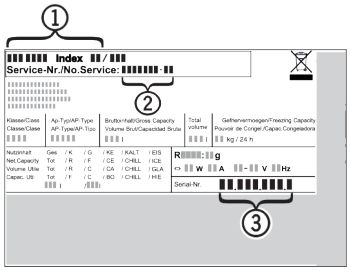


*Fig. 60*

**(1)** Appliance description **(3)** Serial no.
**(2)** Service no.

▶ Note the data on the model plate.

# 12 Shutting down

▶ Empty the appliance.
▶ Switch off appliance. (see Switching the appliance off and on)
▶ Pull the mains plug out of the socket.
▶ Remove the IEC socket if required: Pull the IEC socket out of the appliance plug and move it to the left and right at the same time.
▶ Clean appliance. (see 10.6 Cleaning the appliance)
▶ Leave the door open, so that no unpleasant odours arise.

**On devices without a freezer compartment:** *

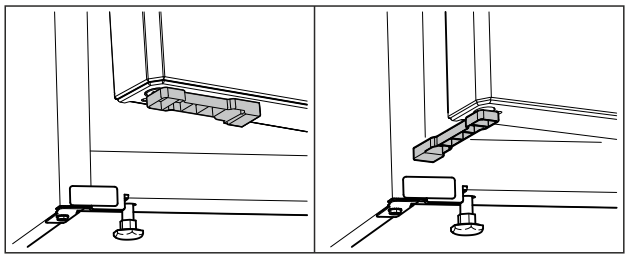

*Fig. 61* *

▶ Fit the door spacer from the accessory pack to the bottom of the door.*
▶ Turn door spacer by 90°. (see Fig. 61) *
▶ Closing the appliance door: Lean the appliance door against the door spacer.*
▷ Device door remains open.*

**On devices with a freezer compartment:** *

▶ Open the freezer compartment door.*
▶ Closing the device door: Lean the device door against the freezer compartment door.*
▷ Device door remains open.*

# 13 Disposal

Ensure that the following requirements are met:

❑ Meaning of the symbols on the appliance: are familiar.
❑ Notes on disposal are familiar. (see 1.6 Information concerning disposal)

## 13.1 Preparing the appliance for disposal

▶ Shutting your appliance down. (see 12 Shutting down)

## 13.2 Disposing of the appliance in an environmentally friendly manner

**WARNING**
Risk of fire due to leaking refrigerant and oil!
The refrigerant inside the appliance is environmentally friendly, but flammable. The oil it contains is also flammable. Escaping refrigerant and oil can ignite in high concentrations and in contact with an external heat source.
▶ Do not damage the refrigerant circuit pipes or the compressor.

▶ Observe the notes on transporting the appliance. (see 3.5 Transporting the appliance)
▶ Remove the appliance without damaging it.
▶ Dispose of appliance according to specifications.

Scan QR Code and find digital operating and installation instructions.




home.liebherr.com

20261104 7086809-00

**Liebherr-Hausgeräte Marica EOOD**
Bezirk Plovdiv
4202 Radinovo
Bulgarien