Instructions for use and installation

EN ORIGINAL OPERATOR'S MANUAL

LIEBHERR

Contents

1 Safety information and warnings ... 3
1.1 Proper use ... 3
1.2 Climate classes ... 3
1.3 User group ... 3
1.4 Installation and commissioning ... 3
1.5 Safely working with the appliance ... 3
1.6 Cleaning ... 4
1.7 Faults, damage and repairs ... 4
1.8 Disposal ... 4
1.9 Conformity ... 4
1.10 SVHC substances in accordance with the REACH Regulation ... 4
1.11 EPREL Database ... 4
1.12 Open-source licenses ... 4
1.13 Spare parts ... 4
1.14 Symbols on the appliance ... 4
1.15 Warning levels ... 5

2 The appliance at a glance ... 5
2.1 Delivered contents ... 5
2.2 Overview of appliances and equipment ... 5
2.3 SmartDevice ... 5

3 Setting up and connecting ... 5
3.1 Installation conditions ... 5
3.2 Appliance dimensions ... 6
3.3 Ventilation requirements ... 7
3.4 Connection dimensions for the power supply ... 7
3.5 Transporting the appliance ... 7
3.6 Unpacking the appliance ... 8
3.7 Explanation of the symbols used ... 8
3.8 Setting up the device ... 9
3.9 Setting up the appliance level ... 9
3.10 After setup ... 10
3.11 Setting up several appliances ... 10
3.12 Fitting the appliance in a kitchen unit ... 10
3.13 Disposal of packaging ... 11
3.14 Connecting the appliance to the power supply ... 11

4 Functionality of the display ... 12
4.1 Navigation using touch button and symbol explanation ... 12
4.2 Menus ... 12

5 Start-up ... 13
5.1 Switching on the appliance (first use) ... 13

6 Storage ... 14
6.1 Information regarding storage ... 14
6.2 Freezer compartment ... 14
6.3 Storage times ... 14

7 Energy saving ... 15

8 Use ... 15
8.1 Operating and display elements ... 15
8.1.1 Temperature display/status display ... 15
8.1.2 LED behavior ... 15
8.1.3 Acoustic signals ... 15
8.2 Appliance functions ... 15
8.2.1 Notes on the appliance functions ... 15
Switching appliance off and on ... 16
Temperature ... 16
SuperFrost ... 16
SabbathMode ... 17
Input lock ... 17
WLAN ... 17
Start defrost cycle ... 18
Demo mode ... 19
Resetting to factory settings ... 19
8.3 Messages ... 19
8.3.1 Ending messages ... 19

9 Equipment ... 20
9.1 Drawers ... 20
9.2 Glass shelves ... 21
9.3 VarioSpace ... 22

10 Maintenance ... 22
10.1 Disassembling / assembling pull-out systems ... 22
10.2 Defrosting the appliance ... 23
10.3 Cleaning the appliance ... 23

11 Customer support ... 23
11.1 Technical specifications ... 23
11.2 Operating noises ... 24
11.3 Technical faults ... 24
11.4 Customer Service ... 25
11.5 Rating plate ... 26

12 Decommissioning ... 26

13 Disposal ... 26
13.1 Prepare the appliance disposal ... 26
13.2 Dispose of the appliance in an environmentally friendly way ... 26

The manufacturer is constantly working to improve all types and models. Therefore, please be aware that we reserve the right to make changes to the shape, equipment and technology.

Symbol	Explanation
	Read instructions Please read the information in these instructions carefully to understand all of the benefits of your new appliance.
	Additional information online The digital manual with supplemental information and in additional languages can be found online by scanning the QR code on the front page of this manual or by entering the service number at **home.liebherr.com/fridge-manuals**. The service number can be found on the serial tag: *Fig.* Example illustration
	Check appliance Check all parts for transport damage. If you have any complaints, please contact your agent or customer service.

*** Depending on model and options**

Symbol	Explanation
*	**Differences** These instructions apply to a range of models, so there may be differences. Sections that apply to certain models only are indicated by an asterisk (*).
▷ ▶	**Instructions and results** Instructions are marked with a ▶. Results are marked with a ▷.
▶	**Videos** Videos about the appliances are available on the YouTube channel of Liebherr-Hausgeräte.

Open-source licenses:

The appliance includes software components that make use of open-source licenses. You can find information on the open-source licenses to be used here: **home.liebherr.com/open-source-licenses**

These operating instructions apply to:

FNX..	46..i / 52..i

Note
If your appliance has an N in its appliance designation, it is a NoFrost appliance.

1 Safety information and warnings

Keep this user information in a safe place so that you can access it at any time.

If you hand the appliance on to someone else, give this user information to the next owner.

To use the appliance properly and safely, read this user information carefully before installation and use. Always follow the instructions, safety instructions and warnings contained in it. The information is important and ensures that you install and operate the appliance safely and correctly.

1.1 Proper use

- This appliance is designed for use in a household and in similar areas of application, e. g.:
  - in staff kitchen areas in stores, offices and other work areas
  - in agricultural environments and in hotels, motels and other accommodation
  - in bed and breakfast locations
  - in catering and related wholesale use
- Other uses:
  - No other application types are permitted.

1.2 Climate classes

The appliance is designed for operation at limited ambient temperatures depending on climate class. The climate class that applies to your appliance is printed on the type plate.

Note
▶ To ensure flawless operation, observe the specified ambient temperatures.

Climate class	for ambient temperatures of
SN	10 °C to 32 °C
N	16 °C to 32 °C
ST	16 °C to 38 °C
T	16 °C to 43 °C
SN-ST	10 °C to 38 °C
SN-T	10 °C to 43 °C

If your appliance does not feature a fixed water connection, it is guaranteed to function flawlessly at an ambient temperature of as low as -15 °C.

1.3 User group

- This appliance is suitable for use by children ages 8 and older and by persons with reduced physical, sensory or mental capacities or lack of experience and skills provided they are supervised or have been instructed on the safe use of the appliance and understand the hazards involved.
- Children must not play with the appliance.
- Do not allow children to clean the appliance or perform user maintenance without supervision.
- Children between the ages of 3-8 must not load or unload the appliance.

1.4 Installation and commissioning

- Only set up and connect the appliance in accordance with the instructions in the user information.
- Before opening the door, set up the appliance in accordance with the instructions in the user information first. This will prevent the appliance from tipping over while the door is open.
- Do not block the ventilation openings in the appliance housing or in the installation housing.
- Do not damage the power cable. Do not operate the appliance with a defective power cable.
- Do not position portable multiple sockets or power adapters on the rear of the appliance.
- The outlet must be easily accessible so that the appliance can be quickly disconnected from the power supply in an emergency. It must be located away from the rear of the appliance.

1.5 Safely working with the appliance

- Never store explosive substances, such as aerosol containers with flammable propellant gas, in the appliance. The printed content information or a flame symbol can identify such aerosol cans. Any leaking gases may be ignited by electrical components.
- To avoid the appliance catching fire, keep lighted candles, lamps and other objects with open flames away from the appliance.
- Make sure that alcoholic beverages or other containers with alcohol are stored tightly sealed. Any leaking alcohol may be ignited by electrical components.
- Avoid prolonged skin contact with cold surfaces or refrigerated/frozen food. For protection, wear e. g gloves.
- The refrigerant inside (information on the type plate) is environmentally friendly but flammable. Any leaking refrigerant may ignite.
  - Do not damage the refrigeration circuit.
  - Do not use any ignition sources inside the appliance.

  - Do not use any electrical devices inside the appliance (e. g. steam cleaners, heaters).
  - If refrigerant leaks: Remove any open flames or sources of ignition near the exit point. Ventilate the room well. Notify customer service.
- Only open the door for a short time. This helps you prevent the temperature from increasing in the appliance's interior.
- Do not reach between the door and the appliance when opening and closing. Fingers may get jammed in.
- The temperature value in the warmest area of the appliance may exceed the set temperature value.

1.6 Cleaning

- Regularly clean surfaces that come into contact with food.
- Do not use electric heaters, steam cleaners, an open flame or defrosting sprays to accelerate the defrosting process.
- Never use sharp objects to remove ice.

1.7 Faults, damage and repairs

- If the power cable of the appliance is damaged, replace the power cable.
- Repairs and work on the appliance are only to be undertaken by customer service or other trained specialists.
- Pull the power plug or switch off the fuse in the event of faults and appliance errors. Always hold it by the plug when pulling out the power plug. Do not pull on the cord.

1.8 Disposal

- The appliance contains value materials and is marked with a symbol accordingly. (see 1.14 Symbols on the appliance)
  - Do not dispose of the appliance with household waste.
  - Dispose of the appliance free of charge at local recycling and recovery centers using the class 1 collection containers.
  - When purchasing a new appliance, return the old appliance to a retailer free of charge.
  - Ask for information about return options.
- There may be personal data on your appliance.
  - Delete any personal data before disposal.
- The appliance contains refrigerant (details on the type plate) and oil. The refrigerant inside the appliance is environmentally friendly, but flammable. The oil used is also flammable. If the refrigerant and oil escape in high concentrations and come into contact with an external heat source, they can ignite.
  - Do not damage the refrigeration circuit.
  - Only dispose of the appliance in accordance with the user information.
- Your appliance is a BlueRox appliance:
  - Observe further information on recycling. home.liebherr.com/bluerox

1.9 Conformity

The refrigerant circuit has been tested for leaks. The appliance complies with the relevant safety regulations as well as the corresponding directives.

For the EU market:	The appliance complies with Directive 2014/53/EU.
For the GB market:	The appliance complies with Radio Equipment Regulations 2017 SI 2017 No. 1206.

The complete text of the EU Declaration of Conformity is available online at: www.Liebherr.de

1.10 SVHC substances in accordance with the REACH Regulation

- Use the link below to check whether you appliance contains SVHC substances in accordance with the REACH Regulation: https://go.liebherr.com/z3eewm

1.11 EPREL Database

- Information on energy consumption labeling and ecodesign requirements has been available in the European Product Database (EPREL) since March 1, 2021. Use the following link to access the product database https://eprel.ec.europa.eu/. There, you will be prompted to enter the model ID. You can find the model ID on the type plate.

1.12 Open-source licenses

- The appliance includes software components that make use of open-source licenses. You can find information about the open-source licenses to be used here: home.liebherr.com/open-source-licenses

1.13 Spare parts

- Spare parts for functional and storable parts of the equipment are available for 15 years.

1.14 Symbols on the appliance

	This symbol may be on the compressor. It relates to the oil in the compressor and indicates the following danger: May be fatal if swallowed and if it enters the respiratory tract. This note is only important for recycling. There is no danger in normal operation. Do not remove this symbol.
	Warning: Risk of fire due to flammable substances. You can find this symbol on the compressor and it may also be on other places on the appliance. The symbol warns of flammable substances. Do not remove this symbol.
	This or a similar symbol may be on the rear of the appliance. It denotes that there are vacuum insulation panels (VIP) or perlite panels in the door and/or housing. This note is only important for recycling. Do not remove this symbol.
	This symbol can be found on the type plate. It indicates that the appliance contains value materials and that you must not dispose of it with household waste. (see 1.8 Disposal)

* Depending on model and options

1.15 Warning levels

DANGER	Indicates an immediately dangerous situation with, if not avoided, potentially fatal consequences, or which might result in severe injuries.
WARNING	Indicates a dangerous situation with, if not avoided, potentially fatal consequences, or which might result in a severe injury.
CAUTION	Indicates a dangerous situation, which, if not avoided, might result in minor or medium injuries.
ATTENTION	Indicates a dangerous situation, which, if not avoided, might result in property damage.
Note	Refers to useful information and tips.

2 The appliance at a glance

2.1 Delivered contents

Check all parts for transport damage. If you have any complaints, please contact the retailer or customer service. (see 11.4 Customer Service)

Delivery contains the following parts:

- Standalone appliance
- Equipment (depending on your model)
- Installation parts (depending on your model)
- “Quick Start Guide”
- “Installation Guide”*
- Service brochure

2.2 Overview of appliances and equipment

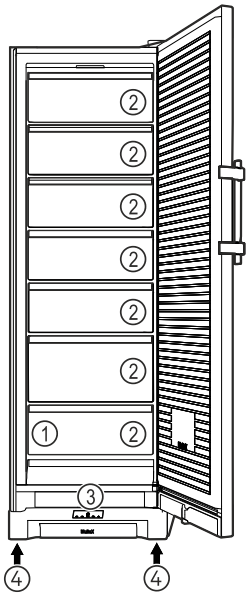

Fig. 1 Example illustration

(1) Type plate
(2) Drawer
(3) Controls
(4) Adjustable foot

2.3 SmartDevice

SmartDevice is the networking solution for your freezer.

You can quickly and easily connect your SmartDevice-enabled appliance to your WiFi. With the SmartDevice app, you can operate your appliance from a mobile device. Additional functions and setting options are available in the SmartDevice app.

SmartDevice-enabled appliance:	Your appliance is capable of being a SmartDevice. To be able to connect your device to WiFi, you need to download the SmartDevice app.
More information about SmartDevice:	**smartdevice.liebherr.com**
Downloading the SmartDevice app:	After you have installed and configured the SmartDevice app, you can connect your appliance to your WLAN using your SmartDevice app the WLAN device function (see WLAN) .

Note
The SmartDevice function is not available in the following countries: Russia, Belarus, Kazakhstan.

3 Setting up and connecting

3.1 Installation conditions

The installation conditions are crucial to ensure that you can operate your appliance safely, efficiently, and trouble-free.

- Observe all safety instructions.
- Observe the installation location and position in the room.

WARNING
Danger of fire due to incorrect positioning!
If the power supply cable or plug touches the back of the appliance, the vibration can damage the power supply cable or the plug resulting in a short circuit.

▶ Make sure the power supply cable is not trapped under the appliance when you position the appliance.
▶ Install the appliance so that it does not touch any plugs or power cables.
▶ Do not connect any appliances to sockets in the area of the back of the appliance.
▶ Do **not** place and operate power strips/power distributors and other electronic devices (such as halogen transformers) at the back of the appliances.

WARNING
Risk of fire due to moisture!
If live parts or the power cord get wet, this can cause a short circuit.

▶ The appliance is designed for use in enclosed spaces. Do not operate the appliance in open space or in damp areas or where there is spray.

WARNING
Leaking refrigerant and oil!
Fire. The refrigerant contained within the appliance is environmentally friendly, but flammable. The oil contained within the appliance is flammable. Escaping refrigerant and oil can ignite if they are of high enough concentration and are exposed to an external heat source.
▶ Do not damage the pipelines of the coolant circuit and the compressor.

3.1.1 Installation location

- Only set up and used the appliance in enclosed spaces.
- The optimum installation location is a dry and well-ventilated space.
- If the appliance is set up in a very humid environment, condensation may form on the outside of it.
  Always ensure good ventilation at the installation location.
- The more refrigerant there is in the appliance, the larger the room in which the appliance is installed must be. If the room is too small, a flammable gas/air mixture may form in the event of a leak. Per 8 g refrigerant, the installation space must be at least 1 m^3 in size. Information on the refrigerant contained can be found on the type plate inside the appliance.
- The floor at the installation location must be horizontal and level.

3.1.2 Position in the space

- Do no set up the appliance in an area with direct sunlight, next to a heating unit or similar.
- You can set up the appliance directly next to an oven.
- If you set up the appliance directly next to an oven, its energy consumption may increase slightly. This depends on the service life and how often the oven is used.
- Always place the rear of the appliance directly against the wall.
- Use in potentially explosive atmospheres is not permitted.

3.1.3 Fitting into a kitchen unit

- You can convert the appliance with kitchen cabinets. (see 3.12 Fitting the appliance in a kitchen unit)

3.2 Appliance dimensions

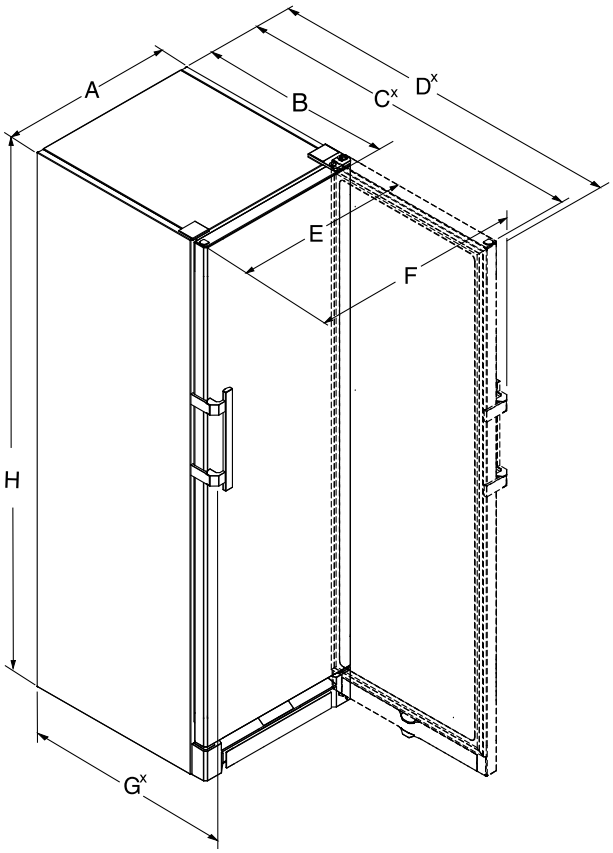

Fig. 2

FNX.. 46..i	
A (mm)	597
B (mm)*	675
C (mm)*	1226
D (mm)*	1233
E (mm)	601
F (mm)	644.5
G (mm)*	717.5
H (mm)	1455

FNX.. 52..i	
A (mm)	597
B (mm)*	675
C (mm)*	1226
D (mm)*	1233
E (mm)	601
F (mm)	644.5
G (mm)*	717.5
H (mm)	1855

*** Depending on model and options**

3.3 Ventilation requirements

NOTICE
Risk of damage due to overheating in the case of insufficient ventilation!
In the case of insufficient ventilation, the compressor can be damaged.
▶ Make sure there is sufficient ventilation.
▶ Observe the ventilation requirements.

If the appliance is integrated into the kitchen cabinet, observe the following ventilation requirements:*

- As a general rule, the larger the ventilation cross-section, the more energy-efficient the appliance operates.*

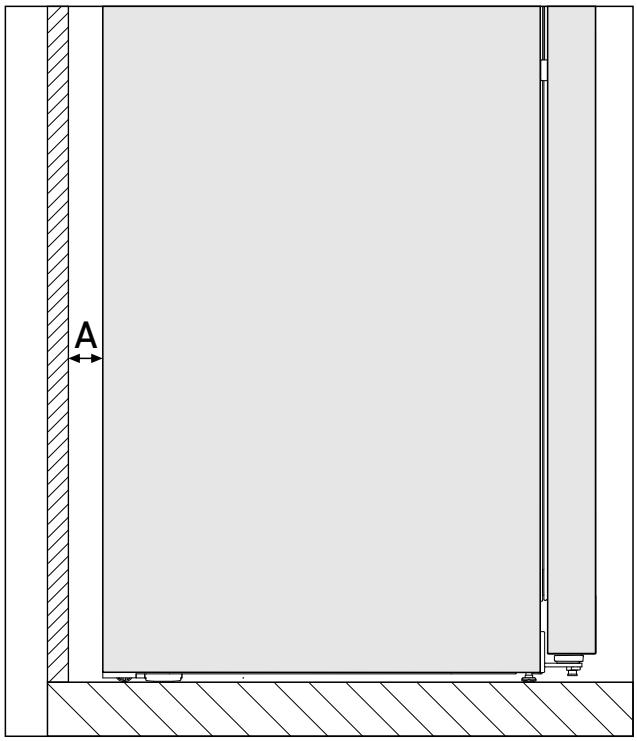

*Fig. 3 **

Wall distance A*
25 mm*

The energy consumption was determined with a wall distance *Fig. 3 (A)* between the rear of the appliance and the wall. If the wall distance is less than *Fig. 3 (A)*, this has no effect on the functionality of the appliance, but energy consumption increases slightly when the distance to the wall is smaller.*

3.4 Connection dimensions for the power supply

The connection for the power supply is on the rear of the appliance. In order for you to be able to safely connect your appliance, make sure that the following requirements are met:

❑ Dimensions for the power supply connection are known and observed. See the table below.
❑ The connection to the power supply is made according to the instructions. (see 3.14 Connecting the appliance to the power supply)

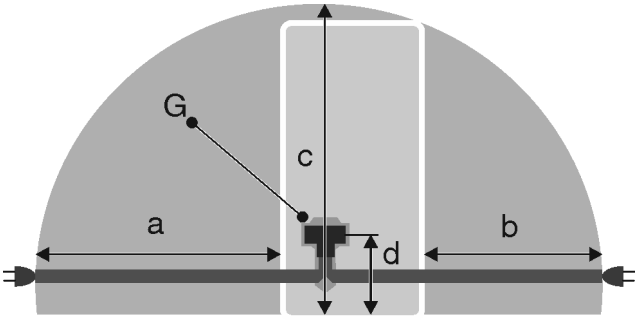

Fig. 4 Fridge/freezer combinations/freezers/full-capacityBio-Fresh appliances

(a) Maximum available length of the power cable
(b) Maximum available length of the power cable
(c) Maximum available vertical length of the power cable
(d) Distance of the appliance plug to the floor
(G) Appliance plug

For 600 mm wide appliances:	
a	~ 1800 mm
b	~ 1400 mm
c	~ 2100 mm
d	~ 200 mm

3.5 Transporting the appliance

DANGER
Danger of injury and damage due to a heavy appliance! Crushing, fractures, severe injuries. Damage to appliance and premises. If you are transporting the appliance, e. g. carrying it up a staircase, and the appliance slips from your hand, it may cause injury or damage to property due to its weight.
▶ Always transport the appliance with the help of four people.
▶ Use carrying straps.

3.5.1 Transporting the appliance for initial installation

Make sure that the following requirements are fulfilled:

❑ Appliance is packaged.
❑ The appliance is upright.

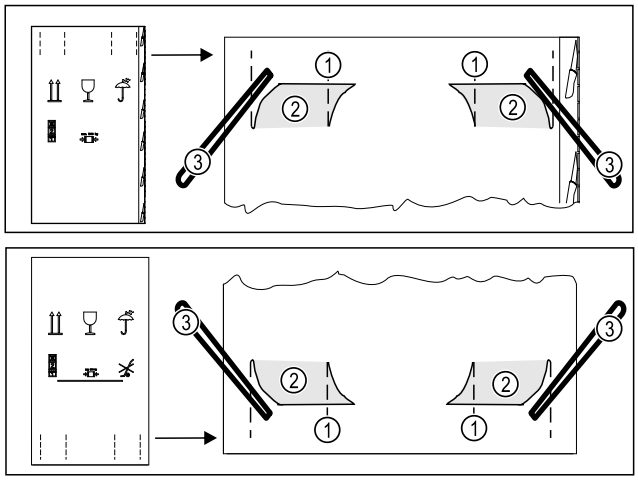

Fig. 5

- ▶ Press in the packaging carton at the top and bottom of the perforation *Fig. 5 (1)*.
- ▶ Pull out the pressed-in flaps *Fig. 5 (2)*.
- ▷ The carrying straps *Fig. 5 (3)* are visible.
- ▶ Pull out all four carrying straps *Fig. 5 (3)*.
- ▶ Hold the appliance by all four carrying straps *Fig. 5 (3)*.
- ▶ Transport the appliance with the help of four people.
- ▶ Do not remove the carrying straps.
- ▶ Unpack the appliance. (see 3.6 Unpacking the appliance)
- ▶ After unpacking the appliance, push the carrying straps behind and under it.

3.5.2 Transporting the appliance after initial installation

Observer the following instructions if you want to transport or move the appliance after initial installation.

Make sure that the following requirements are fulfilled:

- ❑ Appliance is empty.
- ❑ The appliance is upright.
- ❑ Appliance with door(s): The door is secured against undesired opening.
- ❑ Appliance with pull-out cart: The pull-out cart is secured against undesired opening.
- ❑ Appliance with adjustable feet: Adjustable feet are turned in.

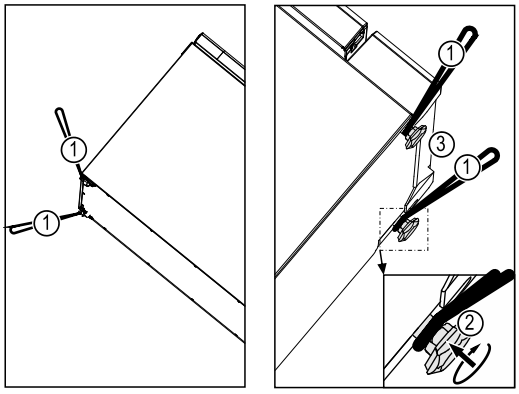

Fig. 6

NOTICE
Risk of damage as a result of improper transport!
- ▶ Always lift up the appliance using the carrying straps.
- ▶ Do **not** lift up the appliance at the base panel.

- ▶ Turn in the adjustable feet *Fig. 6 (2)* on the appliance in order to be able to use the lower transport straps.
- ▶ Pull out the carrying straps at the bottom front of the appliance.
- ▶ Pull out the carrying straps at the top back of the appliance.
- ▶ Use all four carrying straps *Fig. 6 (1)*.
- ▶ Transport the appliance with the help of four people.

After transporting it:
- ▶ Turn out the adjustable feet on the appliance.
- ▶ Align the appliance. (see 3.9 Setting up the appliance level)
- ▶ Push the carrying straps behind and under the appliance.

3.6 Unpacking the appliance

If the appliance is damaged check with the supplier immediately before connecting it.

- ▶ Check the appliance and packaging for damage during transport. If you suspect any damage, please contact your supplier immediately.
- ▶ Remove all materials that could prevent it from being installed properly or prevent proper ventilation from the back or the side panels of the appliance.
- ▶ Remove all protective films from the appliance. Do not use sharp or pointed objects for this.

3.7 Explanation of the symbols used

	There is a risk of injury when performing this step! Observe the safety instructions!
	The instructions apply to several models. Only do this step if it applies to your appliance.
	Please refer to the detailed description in the text section of the instructions for installation.
	This section applies either to a single-door appliance or a two-door appliance.
	Choose between the alternatives: Appliance with door hinge on the right or appliance with door hinge on the left.
	Installation step necessary for IceMaker and/or InfinitySpring.
	Only loosen the screws or slightly tighten them.
	Tighten the screw.
	Check whether the following step is necessary for your model.

	Check to ensure the right installation/the correct fit of the components used.
	Re-measure the specified dimension and correct if necessary.
	Tools for installation: Measuring rod
TORX® 20	Tools for installation: Electric screwdriver and insert We recommend a longer bit insert to reach the screws better.
	Tools for installation: Level
SW7 SW10	Tools for installation: Open-end wrench with wrench sizes 7 and 10
	Two people are required for this step.
	This step is performed at the marked spot on the appliance.
	Aids needed for installation: String
	Aids needed for installation: Angular measure
	Aids needed for installation: Screwdriver
	Aids needed for installation: Scissors
	Aids needed for installation: Marker, erasable
	Enclosure: Remove components
	Properly dispose of components no longer needed.

3.8 Setting up the device

CAUTION

Risk of injury due to heavy appliance!

▶ Have two people transport the appliance to its installation site.

WARNING

Risk of fire from short circuit!

▶ When setting up the appliance: Do not kink, trap, or damage the power cable.

▶ Do not operate the appliance with a defective power cable.

WARNING

Danger of fire and damage!

▶ Do not place devices that give off heat, e.g. microwaves, toasters, etc. on the appliance.

Make sure that the following requirements are fulfilled:

❑ Only move the appliance when it is not loaded.

❑ Always have someone to help when installing the appliance.

▶ Remove the power cable from the enclosed package.

▶ Fully insert the IEC socket of the power cable completely into the appliance plug on the rear side of the appliance. Ensure the IEC socket is firmly in place.

▶ If necessary, use a string to route the power plug to a socket outlet that is freely accessible.

3.9 Setting up the appliance level

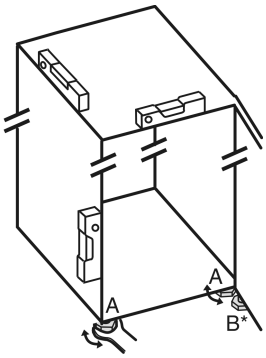

Fig. 7

▶ Unscrew the adjustable feet *Fig. 7 (A)* using the open-end wrench provided and a spirit level until the appliance is firmly aligned and level.

CAUTION

Danger of injury and damage if the appliance tips over!

The appliance may tip over if the additional adjustable foot on the bottom swap bearing block does not rest properly on the floor. This may result in damage or injuries.

▶ Unscrew the additional adjustable foot on the swap bearing block as per the instructions.

- ▶ Unscrew the adjustable foot *Fig. 7 (B)* at the swap bearing block using the open-end wrench provided until it rests on the floor.
- ▶ Turn the adjustable foot *Fig. 7 (B)* another 90°.
- ▷ Appliance is aligned.

3.10 After setup

- ▶ Remove all transport packaging.
- ▶ Pull off the protective film from the outside of the housing.
- ▶ Pull off the protective film from the trim strips and drawer fronts.*
- ▶ Clean the appliance. (see operating instructions)
- ▶ Note the type (model, number), appliance designation, appliance/serial number, purchase date and dealer's address.

3.11 Setting up several appliances

The appliances were developed for different installation options. If you want to install several appliances side by side or on top of each other, make sure that the following requirements are met:

- ❑ Only install those appliances side by side or on top of each other that were developed for the purpose.
- ❑ Observe the instructions and the following table.

NOTICE
Risk of damage caused by water condensate!
- ▶ Do no set up the appliance next to another refrigeration/ freezer unit.

Model	Installation type
All models	individually
Models with a model designa-tion that starts with **S...**.	Side-by-side (SBS)

Model	Installation type
Models without side wall heating	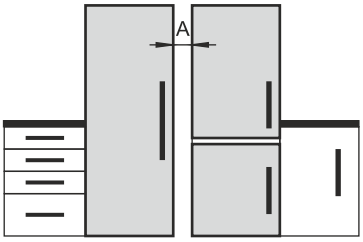 **Next to each other:** Install with a distance **A** from 70 mm between the appliances. If you do not keep this distance, condensate can form on the side walls between the appli-ances. 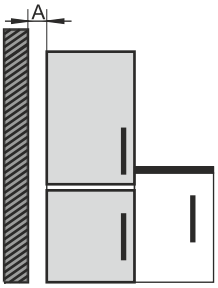 **At an outside wall:** Install with a distance **A** as for a side-by-side installation. If you do not keep this distance, condensate can form on the side wall of the appliance.

Models and their installation type

Assemble the appliances according to the separate assembly instructions.

3.12 Fitting the appliance in a kitchen unit

You can fit the appliance in a kitchen unit. Observe the following installation conditions:

- If you install a top-mounted cabinet above the appliance, you must allow for a ventilation cross-section with the depth at the rear of the top-mounted cabinet accordingly.
- If you install the appliance with the hinges next to a wall, you must account for the distance to the side of the appliance.
- To ensure that the door can be opened completely, the appliance must protrude by the thickness of the front. Depending on the depth of the niche depth, the appliance may protrude further.

WARNING
Risk of fire from short circuit!
- ▶ When setting up the appliance: Do not kink, trap, or damage the power cable.
- ▶ Do not operate the appliance with a defective power cable.

Make sure that the following requirements are fulfilled:

- ❑ Outlet is easily accessible and is not behind the appli-ance.
- ❑ Ventilation requirements are observed. (see 3.3 Ventila-tion requirements)
- ❑ Connection dimensions are taken into account. (see 3.14 Connecting the appliance to the power supply)

*** Depending on model and options**

3.12.1 Niche dimensions for appliances with a handle

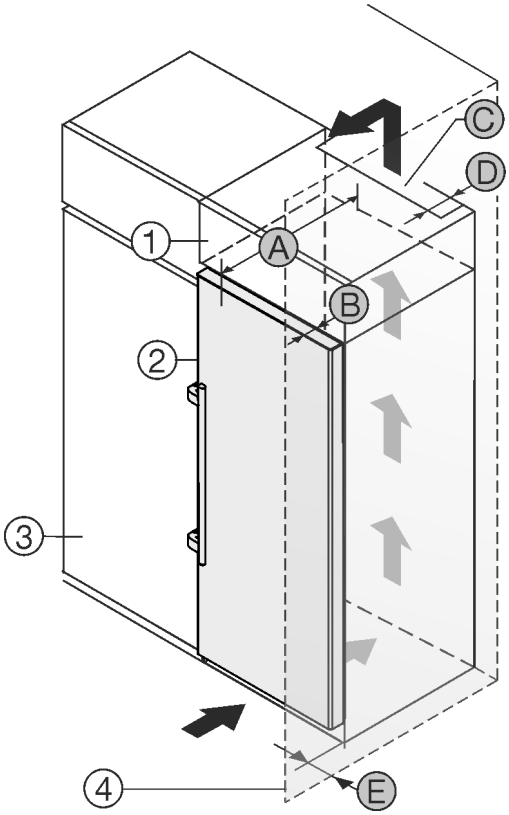

Fig. 8

(1) Top-mounted cabinet
(2) Appliance
(3) Kitchen cabinet
(4) Wall
(A) Appliance depth
(B) Door depth
(C) Ventilation cross-section
(D) Distance of the rear of the appliance
(E) Distance to the side of the appliance

A	675 mm[x]
B	54 mm
C	at least 300 cm^2
D	at least 50 mm
E	at least 50 mm

3.13 Disposal of packaging

WARNING
Danger of suffocation from packaging materials and films!
▶ Do not allow children to play with packaging materials.

The packaging is made from recyclable materials:
- Corrugated card/cardboard
- Parts made of foamed polystyrene
- Films and bags from polyethylene
- Packing bands from polypropylene
- Wood frame nailed together with a polyethylene window*

▶ Take the packaging material to an official collection point.

3.14 Connecting the appliance to the power supply

WARNING
Danger of electric shock and injury due to damaged appliance or damaged mains cable!
Cuts and fatal injury. If the appliance or the mains cable is damaged during transport, you may be electrocuted. You could also cut yourself on damaged parts of the appliance housing.
▶ Check the appliance and the mains cable for damage after transport.
▶ Never put the appliance into operation if the appliance or the mains cable are damaged.
▶ Contact Customer Service.

You can connect your appliance to the mains using the power cable supplied separately. The mains power cable has an appliance coupler at one end and a mains plug at the other end.

Make sure that the following requirements are fulfilled:
- The appliance and power cable are undamaged.
- The appliance is set up in accordance with the regulations. (see 3.8 Setting up the device)
- Requirements for the electrical connection are met.
- Dimensions for connection in accordance with regulations are known and observed. (see 3.4 Connection dimensions for the power supply)
- Mains voltage and frequency correspond to the specifications on the type plate.
- The socket is grounded and fused in accordance with regulations.
- The tripping current for the fuse is between 10 A and 16 A.
- Outlet is easily accessible and is not behind the appliance. (see 3.4 Connection dimensions for the power supply)

NOTICE
Danger of damage to incorrect operation!
Damage to the electrical components of the appliance.
▶ Only use the supplied power cable.

WARNING
Danger of fire due to incorrect connection!
Burns.
Damage to the appliance.
▶ Do not use an extension cord.
▶ Do not use a multipoint connector strip.

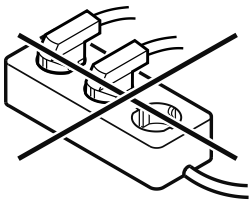

NOTICE
Danger of damage to incorrect connection!
Damage to the appliance.
▶ Do not connect the appliance to a stand-alone inverter, e.g. solar power systems and petrol generators.

▶ Connect the mains plug of the power cord to the power supply. Ensure the main plug is firmly plugged into the outlet.

▷ Appliance is connected. For initial commissioning, see the next chapter or the operating instructions.

4 Functionality of the display

You operate your appliance using the touch button.

4.1 Navigation using touch button and symbol explanation

In the illustrations, different symbols are used for navigation using the touch button. The following table describes these symbols.

Symbol	Description
	Touch the touch button briefly with your finger: Navigate through the main menu and submenu. If a number is depicted in the hand: The number tells you how many times you have to briefly touch the touch button in succession to navigate to a specific function.
	Touch the touch button with your finger for 3 seconds: Switch on appliance. In the main menu: Switch off appliance. In the submenu: Switch to the main menu. Deactivate the active function of the submenu.
	Touch the touch button with your finger for 7 seconds: In the main menu: Open submenu.
	Arrow with clock: It takes more than 10 seconds for the following message to appear in the display.
	Arrow with a time indication: It takes the specified amount of time until the following message appears in the display.

Note
If you touch the touch button for **15 seconds**, the service menu is opened. The service menu can be recognized by the flashing of LED 5 and the WLAN LED. This menu is especially for service technicians.
▶ Exit the service menu: Touch the touch button for 3 seconds or perform no action on the display for 5 minutes.

4.2 Menus

The appliance functions can be found in various menus.

Menu	Description
Main menu	When you switch the appliance on, you are automatically in the main menu. From here you can navigate to the appliance functions and to the submenu.
Submenu	The submenu contains additional appliance functions for setting up your appliance.

4.2.1 Main menu

The following functions can be activated/deactivated in the main menu:

LED	Description
	Temperature -16 °C
	Temperature -18 °C
	Temperature -20 °C
	Temperature -28 °C
	SuperFrost

Meaning of the LEDs in the main menu

4.2.1 Opening the main menu

When you switch the appliance on, you are automatically in the main menu.

If you are in the submenu and want to switch to the main menu:
▶ Carry out action steps (see 4.2.2 Exiting the submenu) .

4.2.1 Navigating in the main menu

If you navigate in the main menu, LED 5 is followed by LED 1 again.

Fig. 9
▶ Briefly touch the touch button repeatedly until the LED of the desired function lights up.
▷ Function is activated.

4.2.1 Sleep mode of the display

If you do not touch the touch button in the main menu for 10 seconds, the display switches to sleep mode. Sleep mode prevents you from adjusting the temperature by accidentally touching the touch button.

Ending sleep mode:

*** Depending on model and options**

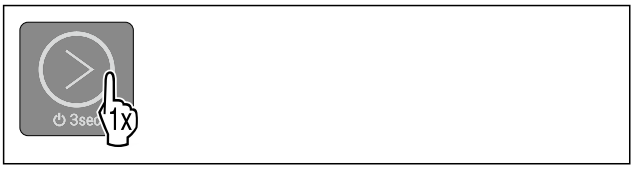

Fig. 10

▶ Briefly touch the touch button.
▷ Confirmation tone sounds.
▷ Set temperature flashes once.
▷ Sleep mode is ended.

4.2.2 Submenu

The following functions can be activated/deactivated in the submenu:

LED	Description	LED position
-16°C	Input lock	LED 1
-18°C	SabbathMode	LED 2
-20°C	Reset to factory settings	LED 3
-28°C	Start defrost cycle	LED 4

Meaning of the LEDs in the submenu

4.2.2 Opening the submenu

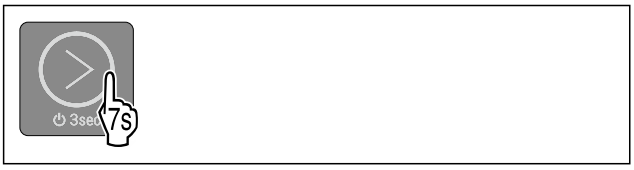

Fig. 11

▶ Carry out action steps according to the illustration until a double confirmation tone sounds after 7 seconds.
▷ LEDs 1-5 light up: You are in the submenu.
▷ If you do not perform any action on the display for 5 seconds, the display jumps back to the main menu.

4.2.2 Exiting the submenu

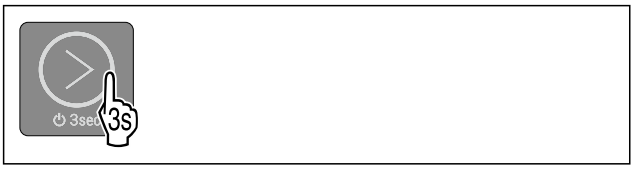

Fig. 12

▶ Carry out action steps according to the illustration.

-or-

▶ Do not touch the touch button for 5 seconds.

▷ You are in the main menu.

4.2.2 Navigating in the submenu

If you navigate in the submenu, LED 1 is followed by the LED of the last function in the submenu.

Fig. 13

▶ Briefly touch the touch button repeatedly until the LED of the desired function lights up.
▷ After 5 seconds without interaction, the selected function is automatically activated.

5 Start-up

5.1 Switching on the appliance (first use)

Make sure that the following requirements are fulfilled:

❑ The appliance has been set up and connected according to the installation instructions.
❑ All adhesive strips, adhesive and protective films and transport locks are removed from inside and on the appliance.
❑ All marketing leaflets are removed from the drawers.
❑ You are familiar with the functionality of the display. (see 4 Functionality of the display)

Switch on the appliance:

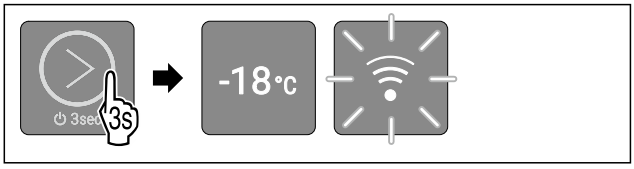

Fig. 14

▶ Touch the touch button according to the illustration for 3 seconds until the confirmation tone sounds.
▷ Appliance is switched on.
▷ Interior lighting is activated.
▷ LED 2 light ups: Temperature is set to -18 °C at the factory.
▷ The appliance cools to the target temperature set at the factory.
▷ WLAN LED is flashing: WLAN access point is open for 15 minutes. (see Establishing the WLAN connection)

Appliance starts in demo mode:

If the appliance starts in demo mode:

▶ Deactivate demo mode. (see Deactivating demo mode)

Display switches to sleep mode:

If the display switches to sleep mode:

▶ Briefly touch the touch button. (see 4.2.1 Sleep mode of the display)

More information:

- Start the SmartDevice for the first time. (see 2.3 SmartDevice) and (see WLAN)

Note

The manufacturer recommends:

▶ Store **frozen foods** at -18 °C or colder.
▶ Observe the notes on storing food. (see 6.1 Information regarding storage)

Note
Accessories can be purchased from the Liebherr-Hausgeräte store at home.liebherr.com/shop/de/deu/zubehor.html.

6 Storage

6.1 Information regarding storage

WARNING
Risk of fire from electrical appliances!
If you use electrical devices in the food area of your appliance, they may case a fire.
▶ Do not use electrical devices in the food area of the appliance if they have not been recommended by the manufacturer.

Note
Insufficient ventilation results in an increase in energy consumption and reduction of the refrigerating performance
▶ Always keep the air slots unobstructed.

Observe the following specifications for storage:
- Package food properly.
- Package raw meat or fish in clean, closed containers. This will prevent meat or fish from touching or dripping onto other food.
- Leave space between goods to ensure good air circulation.
- Store food according to the instructions on the packaging.
- Always observe the best-before date indicated on the packaging.

Note
Failure to follow these guidelines can lead to foodstuffs spoiling.

6.2 Freezer compartment

Here, a dry, frosty storage climate is created at -18 °C. The frosty storage climate is suitable for storing frozen food for several months, for making ice cubes or freezing fresh food.

6.2.1 Freezing food

Freezing quantity

The maximum amount of fresh food that you can freeze within 24 hours is specified on the type plate (see 11.5 Rating plate) under “Freezing capacity ... kg/24h.”

To ensure that food quickly freezes through, adhere to the following quantities per package:
- Fruit and vegetables up to 1 kg
- Meat up to 2.5 kg

Freezing food using SuperFrost

Depending on the amount of food to be frozen, you can activate SuperFrost before freezing to reach lower freezing temperatures. (see SuperFrost)
▶ Activate SuperFrost if the amount of food you have to freeze is more than approx. 2 kg.

The time at which you activate SuperFrost depends on the amount of food you have to freeze:

Freezing quantity	Time at which you should activate SuperFrost
Small amount of food to freeze	Activate SuperFrost about 6 hours before freezing. As soon as the appliance automatically deactivates SuperFrost you can begin rearranging your food items.
Maximum amount of food to freeze	Activate SuperFrost about 24 hours before freezing. As soon as the appliance automatically deactivates SuperFrost you can begin rearranging your food items.

Arranging your food properly

CAUTION
Risk of injury from broken glass!
Bottles and cans with beverages can burst during freezing. This applies in particular to carbonated beverages.
▶ Only freeze bottles and cans with beverages if you have activated the BottleTimer function in the SmartDevice app.

Freezing quantity	Arranging your food properly
Small amount of food to freeze	Place packaged food in the top drawer. If possible, place groceries at the back of the drawer near the rear wall.
Maximum amount of food to freeze	Distribute packaged groceries throughout all drawers, but only store food that is already deep frozen in the bottom drawer. If possible, place groceries at the back of the drawer near the rear wall.

6.2.2 Defrosting food

WARNING
Danger of food poisoning!
▶ Do not re-freeze defrosted food.
▶ Use defrosted foodstuff as quickly as possible.

You can defrost food in several ways:
- In a refrigeration unit
- In the microwave
- In the oven/fan-assisted oven
- At room temperature

▶ Take out only as much food as necessary.

6.2.3 Freezer tray

You can freeze berries, herbs, vegetables and other small frozen food in the freezer tray without it all freezing together. The frozen food is less likely to get squashed and subsequent portioning is easier.
▶ Distribute food on the freezer tray without packaging and well spaced out.

6.3 Storage times

The storage times given are guidelines

Food with a “use by” date must still be consumed by the date indicated on the package

Guidelines for storage periods for various foods		
Ice cream	at -18 °C	2 to 6 months
Sausage, ham	at -18 °C	2 to 3 months
Bread, bakery products	at -18 °C	2 to 6 months
Game, pork	at -18 °C	6 to 9 months
Fish, fatty	at -18 °C	2 to 6 months
Fish, lean	at -18 °C	6 to 8 months
Cheese	at -18 °C	2 to 6 months
Poultry, beef	at -18 °C	6 to 12 months
Vegetables, fruit	at -18 °C	6 to 12 months

7 Energy saving

- Always ensure good ventilation. Do not obstruct ventilation openings or grilles.
- Never block air slits in the fan.
- Do no set up the appliance in an area with direct sunlight, next to a heating unit or similar.
- If you set up the appliance directly next to an oven, its energy consumption may increase slightly. This depends on the service life and how often the oven is used.
- Energy consumption depends on installation conditions such as the ambient temperature . A warmer ambient temperature can increase the energy consumption.
- Avoid opening the appliance door for any longer then necessary
- The lower the temperature is set the higher the energy consumption.
- All food stored in the appliance should be well wrapped and covered. This prevents frost buildup.
- Insertion of warm foods: first let the food cool down to room temperature.

8 Use

8.1 Operating and display elements

The display enables a quick overview of the current appliance status, the temperature setting, the status of functions and messages.

You operate your appliance using the touch button.

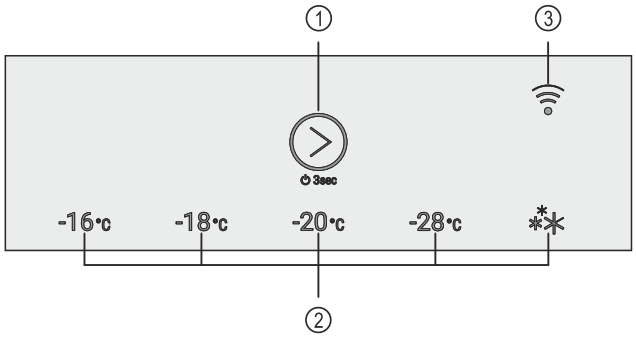

Fig. 15 Example illustration: Display

(1) Touch button (operating element)
(2) Temperature display/status display
(3) WLAN LED

8.1.1 Temperature display/status display

The temperature display/status display consists of five LEDs:

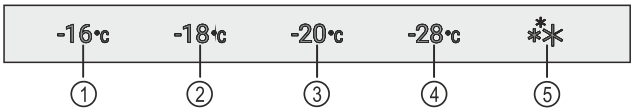

Fig. 16 Example illustration

(1) LED 1
(2) LED 2
(3) LED 3
(4) LED 4
(5) LED 5

The LEDs indicate temperature settings in the main menu (see 4.2.1 Main menu) and functions in the submenu (see 4.2.2 Submenu) .

8.1.2 LED behavior

The appliance status can be recognized by the lighting or flashing of the LEDs:

LED behavior (example illustration)	Description
	LED does not light up: LED is not selected. Function is not active.
	LED light ups: LED is selected or function is active.
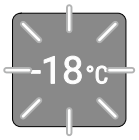	**LED for the temperature display/ status display flashes:** LED flashes after a power failure or temperature alarm until the set temperature is reached. **Multiple LEDs flash simultaneously:** Error has occurred. (see 8.3 Messages)
	WLAN LED flashes: WLAN access point is open or WLAN connection is being established.

LED behavior

8.1.3 Acoustic signals

An acoustic signal sounds in the following cases:

Acoustic signal	Description
Confirmation tone	Sounds when you touch the touch button.
Alarm tone	Sounds when an error occurs. (see 8.3 Messages)
Error tone	Sounds when you touch the touch button, but the interaction is not possible.

8.2 Appliance functions

8.2.1 Notes on the appliance functions

The appliance functions are set at the factory so that your appliance is fully functional.

Before you alter, activate or deactivate the appliance functions, make sure that the following requirements are met:

- ❑ You have read and understood the descriptions of how the display works. (see 4 Functionality of the display)
- ❑ You have familiarized yourself with the operating and display elements of your appliance. (see 8.1 Operating and display elements)

Switching appliance off and on

This function switches the entire appliance on and off.

Switching off the appliance

If you switch off the appliance, the settings that were made before remain stored.

Make sure that the following requirements are fulfilled:

- ❑ Handling instructions (see 12 Decommissioning) have been completed.
- ❑ You are in the main menu. (see 4.2.2 Exiting the submenu)

Fig. 17

- ▶ Carry out action steps according to the illustration until a confirmation tone sounds.
- ▷ LEDs of the display no longer light up.
- ▷ Interior lighting is deactivated.
- ▷ Appliance is switched off.

Switching on the appliance

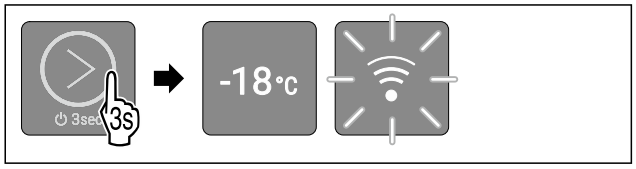

Fig. 18 Example illustration: For appliances with installed/ inserted SmartModule

- ▶ Carry out action steps according to the illustration until a confirmation tone sounds.
- ▷ Appliance is switched on.
- ▷ Interior lighting is activated.
- ▷ During the first use: The appliance cools to the target temperature set at the factory.
- ▷ If the appliance was previously in operation: The appliance cools to the target temperature set earlier.
- ▷ During the first use or if appliance was not previously connected to the WLAN: WLAN access point is open for 30 minutes. (see Establishing the WLAN connection)
- ▷ If the appliance has already been connected to the WLAN: Appliance connects to the WLAN automatically.

Temperature

Use this function to set the temperature.

The temperature depends on the following factors:

- How often the door is opened
- How long the door is open
- The room temperature of the installation site
- Type, temperature and amount of food

Recommended setting: -18 °C

Setting the temperature

The function is located in the main menu at the positions of LEDs 1-4.

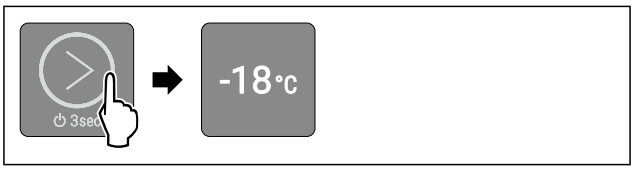

Fig. 22 Example illustration

- ▶ Briefly touch the touch button according to the illustration repeatedly until the desired temperature lights up.
- ▷ Temperature is set.
- ▷ The appliance cools to the set target temperature.

SuperFrost

This function activates or deactivates SuperFrost. Activating SuperFrost the appliance increases the freezing capacity. This allows you to achieve lower freezer temperatures.

Application:

- Quickly freezing fresh food through to the core. This ensures that the nutrition value, look, and taste of the food is preserved.
- Increasing cold reserves in stored frozen food before defrosting the appliance.

Activating SuperFrost

The function is located in the main menu at the position of LED 5.

Make sure that the following requirements are fulfilled:

- ❑ The freezing volume and time for SuperFrost activation are taken into account. (see Freezing food using SuperFrost)

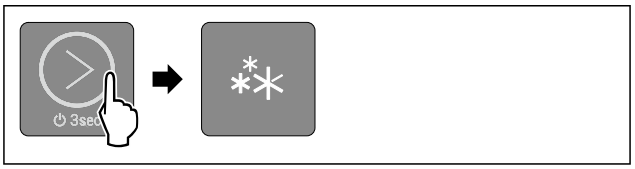

Fig. 24

- ▶ Briefly touch the touch button according to the illustration repeatedly until LED 5 lights up.
- ▷ LED 5 light ups: SuperFrost is activated.
- ▷ The appliance cools to the target temperature.

Deactivating SuperFrost

SuperFrost is automatically deactivated after 56 to 72 hours. However, you can also manually deactivate SuperFrost at any time by setting a temperature:

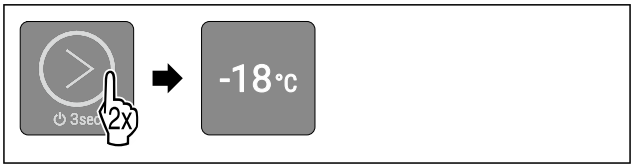

Fig. 25 Example illustration

- ▶ Briefly touch the touch button according to the illustration repeatedly until the desired temperature lights up.
- ▷ Temperature is set and SuperFrost is deactivated.
- ▷ Appliance continues to run in normal operation.
- ▷ The appliance cools to the set target temperature.

*** Depending on model and options**

SabbathMode

This function activates and deactivates the SabbathMode. If you activate this function, some electronic functions are switched off. Your appliance thereby meets the religious requirements of Jewish holidays such as the Sabbath and complies with STAR-K Kosher certification.

Appliance status with active SabbathMode
LEDs 1-5 light up.
All functions in the display except the **Deactivating SabbathMode function** are disabled.
Active functions remain active.
The interior lighting is deactivated.
Messages are not displayed.
There is no door alarm.
There is no temperature alarm.
The defrost cycle operates only for the specified time without taking into account the appliance usage.
After a power failure, the device returns to SabbathMode.
The WLAN connection is disconnected.

Appliance status

Note
This appliance has certification from the "Institute for Science and Halacha". (www.machonhalacha.co.il)

You can find a list of STAR-K-certified appliances at www.star-k.org/appliances.

Activating SabbathMode

WARNING
Danger of poisoning from spoiled food!
If you have SabbathMode activated and a power failure occurs, no message appears in the status display about the power failure. Once the power is restored, the appliance continues to operate in SabbathMode. The power failure may mean that food spoils and the consumption of this food could lead to food poisoning.
After a power failure:
▶ Do not consume food that has been frozen and thawed.

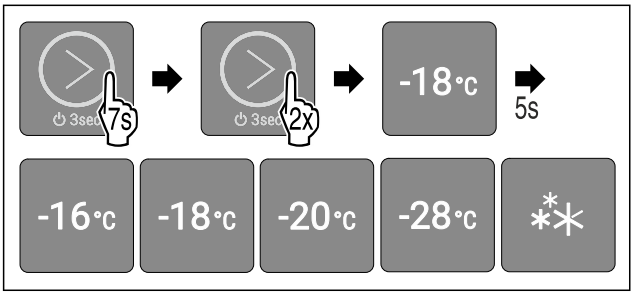

Fig. 26
▶ Carry out action steps according to the illustration.
▷ LED 2 light ups.
▷ After 5 seconds without interaction, SabbathMode is activated. LEDs 1-5 light up.

Deactivating SabbathMode

SabbathMode is automatically deactivated after 80 hours. However, you can also manually deactivate SabbathMode at any time:

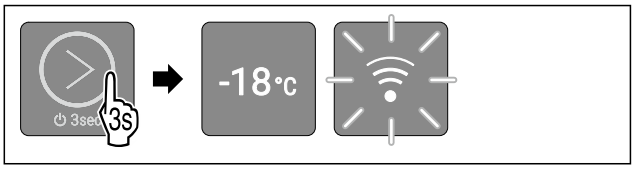

Fig. 27 Example illustration depending on the previously set temperature
▶ Carry out action steps according to the illustration until a confirmation tone sounds.
▷ SabbathMode is deactivated.
▷ Interior lighting is activated.
▷ Appliance continues to run in normal operation. LED of the previously set temperature lights up.
▷ If the appliance has already been connected to the WLAN: Appliance connects to the WLAN automatically.
▷ You are in the main menu.

Input lock

This function activates and deactivates the input lock. The input lock prevents the appliance from being operated accidentally, e. g. by children.

Application:
- Prevent unintentional changes of functions.
- Prevent switching off of the appliance.
- Prevent unintentional temperature setting.

Activating the input lock

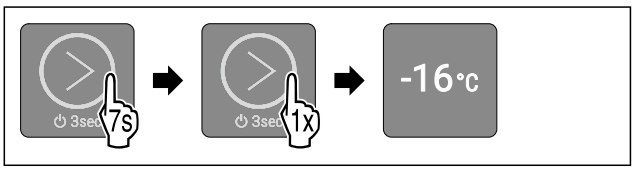

Fig. 28
▶ Carry out action steps according to the illustration.
▷ LED 1 light ups.
▷ After 5 seconds without interaction, the input lock is activated.

Deactivating the input lock

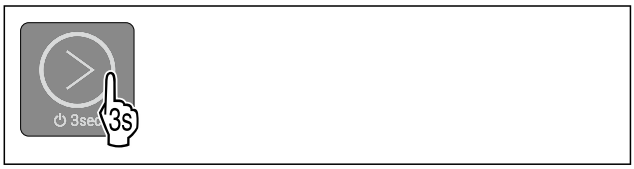

Fig. 29
▶ Carry out action steps according to the illustration until a confirmation tone sounds.
▷ Input lock is deactivated.
▷ You are in the main menu.

WLAN

Use this function to connect your appliance to WLAN. You can then operate it via the SmartDevice app on a mobile device. You can also use this function to disconnect or reset the WLAN connection.

More information on the SmartDevice: (see 2.3 SmartDevice)

Note
The SmartDevice function is not available in the following countries: Russia, Belarus, Kazakhstan.

Establishing the WLAN connection

In order to connect the appliance to the WLAN, the WLAN access point of the appliance must be open. When you use the appliance for the first time, open the WLAN access point by switching on the appliance. If the appliance was already in operation without a WLAN connection, open the WLAN access point by switching the appliance off and on again.

Make sure that the following requirements are fulfilled:

- ❑ SmartDevice app is installed (see apps.home.liebherr.com).
- ❑ Registration in the SmartDevice app is complete.

Switching on the appliance (first use):

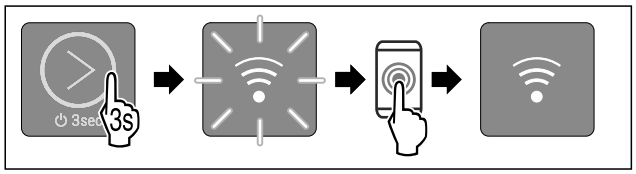

Fig. 30

- ▶ Switch on the appliance: Touch the touch button according to the illustration for 3 seconds until the confirmation tone sounds.
- ▷ Appliance is switched on.
- ▷ WLAN LED flashes: WLAN access point is open for 30 minutes.
- ▶ Connect the appliance to the WLAN via the SmartDevice app.
- ▷ If the appliance is connected to the WLAN: WLAN LED lights up continuously.

Switch the appliance off and on again (appliance is already in operation):

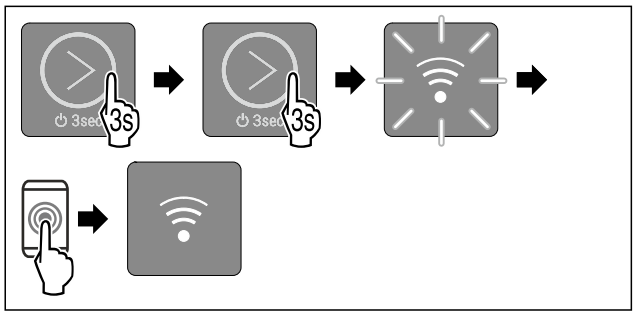

Fig. 31

- ▶ Switch off the appliance in the main menu: Touch the touch button according to the illustration for 3 seconds until the confirmation tone sounds.
- ▷ Appliance is switched off.
- ▶ Switch the appliance on again: Touch the touch button according to the illustration for 3 seconds until the confirmation tone sounds.
- ▷ Appliance is switched on.
- ▷ WLAN LED flashes: WLAN access point is open for 30 minutes.
- ▶ Connect the appliance to the WLAN via the SmartDevice app.
- ▷ If the appliance is connected to the WLAN: WLAN LED lights up continuously.

Disconnecting the WLAN connection

To disconnect the WLAN connection, the entire appliance must be reset to factory settings.

- ▶ Carry out action steps. (see Resetting to factory settings)
- ▷ Appliance is reset.
- ▷ WLAN LED flashes: WLAN access point is open for 30 minutes.
- ▷ The WLAN connection is deactivated after 30 minutes.

Resetting the WLAN connection

To reset the WLAN connection, the entire appliance must be reset to factory settings.

- ▶ Carry out action steps. (see Resetting to factory settings)
- ▷ Appliance is reset.
- ▷ WLAN LED flashes: WLAN access point is open for 30 minutes.
- ▶ Connect the appliance to the WLAN again. (see Establishing the WLAN connection)

-or-

- ▶ Use the appliance without a WLAN connection.

Start defrost cycle

Use this function to start the automatic defrost cycle manually if the defrost cycle does not start automatically in case of an error.

Starting the defrost cycle

When the defrost cycle is started, all functions except the **Canceling the defrost cycle function** are disabled during the defrosting.

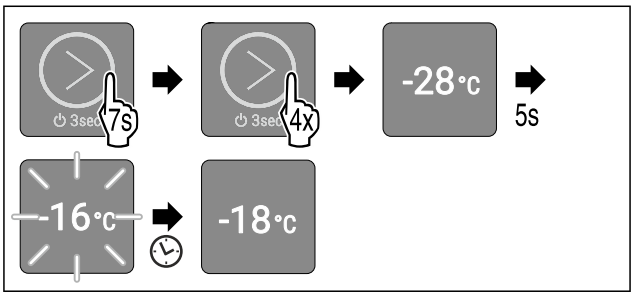

Fig. 32 Example illustration depending on the previously set temperature

- ▶ Carry out action steps according to the illustration.
- ▷ LED 4 light ups.
- ▷ After 5 seconds without interaction, the defrost cycle starts. LED 1 flashes until the defrost cycle is automatically completed.
- ▷ When the defrost cycle is completed: Appliance continues to run in normal operation. LED of the previously set temperature lights up.
- ▷ You are in the main menu.

Canceling the defrost cycle

The defrost cycle is automatically completed. However, you can also cancel the defrost cycle at any time during the defrosting:

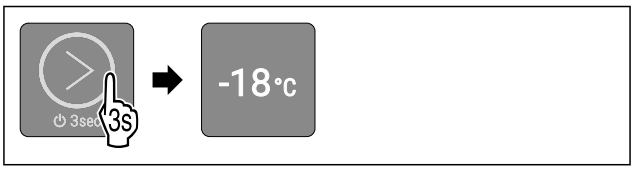

Fig. 33 Example illustration depending on the previously set temperature

- ▶ Carry out action steps according to the illustration until a confirmation tone sounds.
- ▷ Defrost cycle is canceled.
- ▷ Appliance continues to run in normal operation. LED of the previously set temperature lights up.
- ▷ You are in the main menu.

Demo mode

Demo mode is a special feature for dealers who want to demonstrate appliance features. If you activate demo mode, all refrigeration functions are deactivated and you cannot open the submenu.

If you activate and then deactivate demo mode, the appliance will be reset to factory settings. (see Resetting to factory settings)

Activating demo mode

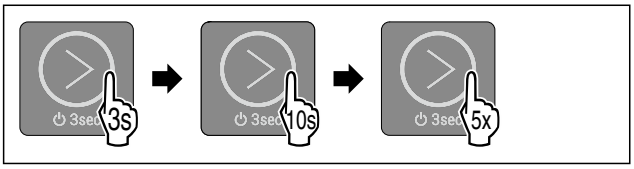

Fig. 34

▶ Touch the touch button according to the illustration for 3 seconds until the confirmation tone sounds.
▷ Appliance is switched off.
▶ Touch the touch button according to the illustration for 10 seconds until the confirmation tone sounds after 10 seconds.
▶ Briefly touch the touch button five times.
▷ All temperature LEDs briefly light up twice: Demo mode is activated.
▷ Appliance is switched off.
▶ Switch on appliance. (see Switching on the appliance)
▷ Appliance is in demo mode.

Deactivating demo mode

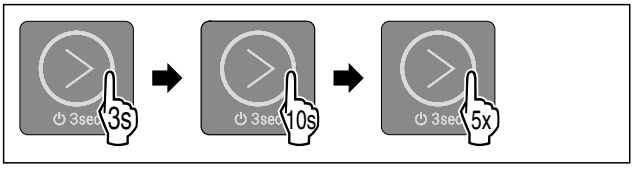

Fig. 35

▶ Touch the touch button according to the illustration for 3 seconds until the confirmation tone sounds.
▷ Appliance is switched off.
▶ Touch the touch button according to the illustration for 10 seconds until the confirmation tone sounds after 10 seconds.
▶ Briefly touch the touch button five times.
▷ All temperature LEDs light up four times: Demo mode is deactivated.
▷ Appliance is switched off.
▶ Switch on appliance. (see Switching on the appliance)

Resetting to factory settings

Use this function to reset all settings to factory settings. All settings you have made so far (such as login data) are reset to their original settings.

Application:

- Resetting the appliance
- Resetting the WLAN connection

Performing a reset

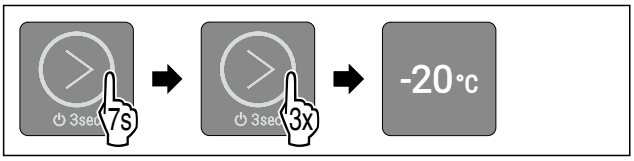

Fig. 36 Example illustration

▶ Carry out action steps according to the illustration.
▷ LED 3 light ups.
▷ After 5 seconds without interaction, the appliance is reset.
▷ Appliance is switched off.
▶ Switch on the appliance. (see 5.1 Switching on the appliance (first use))
▷ You can reset login data.

8.3 Messages

Messages are indicated acoustically by an alarm tone and visually by a flashing of the LEDs in the display. Different LEDs flash depending on the type of message.

You can end the following messages yourself. For all other messages, you must contact Customer service.
(see 11.4 Customer Service)

Message	Cause	Ending the message
Alarm sounds in increasing volume. Interior lighting pulses. **Door alarm**	The message appears if the door is open for more than 60 seconds.	Carry out action steps (see Door alarm) .
LEDs 1-5 flash. Alarm tone sounds. Interior lighting pulses. **Power failure alarm**	The message appears when a power failure has occurred and the freezer temperature has changed.	Carry out action steps (see Power failure alarm) .
LEDs 1-5 flash. Alarm tone sounds. Interior lighting pulses. **Temperature alarm**	The message appears if the temperature does not correspond to the set temperature.	Carry out action steps (see Temperature alarm) .
LED 2, LED 4 and WLAN LED flash. **WLAN error**	The message appears if the appliance could not be connected to the WLAN or if the WLAN connection is interrupted.	Carry out action steps (see WLAN error) .

Overview of messages

8.3.1 Ending messages

Door alarm

Fig. 37

▶ End alarm: Carry out action steps according to the illustration.

-or-

▶ Close the door.

▷ Alarm is ended.
▷ If you do not close the door: Message will appear again after 3 minutes.

Power failure alarm

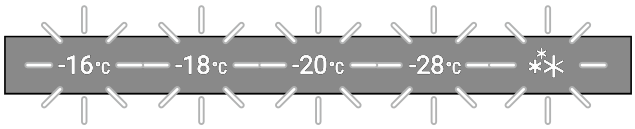

Fig. 38 Display in the event of a power failure

Fig. 39

▶ End alarm: Carry out action steps according to the illustration.
▷ Appliance continues to run in normal operation.
▷ LED of the previously set temperature flashes until temperature is reached.
▷ **LED flashes once per second:** Freezer temperature was below -9 °C during the power failure. Food can still be consumed.
▷ **LED flashes twice per second:** Freezer temperature has risen above -9 °C during the power failure.
If LED flashes twice per second:
▶ Check the food.

Temperature alarm

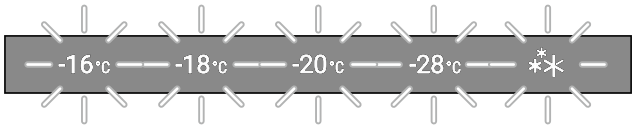

Fig. 40 Display in the event of a temperature alarm

Possible causes for temperature differences:

- You have put in warm, fresh food.
- Too much warm room air has flowed in during the rearrangement and removal of food.
- The power has been out for a longer period of time.
- The appliance is defective.

▶ Remedy the cause.

Fig. 41

▶ End alarm: Carry out action steps according to the illustration.
▷ Appliance continues to run in normal operation.
▷ LED of the previously set temperature flashes until temperature is reached.
▷ **LED flashes once per second:** Freezer temperature was below -9 °C during the temperature alarm. Food can still be consumed.
▷ **LED flashes twice per second:** Freezer temperature has risen above -9 °C during the temperature alarm.
If LED flashes twice per second:
▶ Check the food.

WLAN error

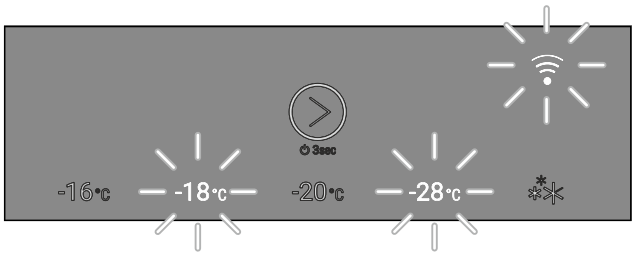

Fig. 42 Display in the event of a WLAN error

▶ Check the WLAN connection.

Fig. 44

▶ End alarm: Carry out action steps according to the illustration.

-or-

▶ Reestablish the WLAN connection.

▷ Appliance continues to run in normal operation. LED of the previously set temperature lights up.

9 Equipment

9.1 Drawers

You can remove the drawers for cleaning.

You can remove the drawers to use VarioSpace.

The way to remove/insert the drawers varies depending on the pull-out system. Your appliance can contain a variety of pull-out systems.

Note
Insufficient ventilation results in an increase in energy consumption and reduction of the refrigerating performance.
▶ Leave the bottom drawer in the appliance.
▶ Always keep the fan air slots on the inside of the rear wall clear.

9.1.1 Drawer on appliance base or glass shelf

The drawer runs directly on the appliance base or on a glass shelf. There are no rails.

When you remove the drawers, you can use the glass shelves below them as storage shelves.

Note
In freezer appliances, the bottom drawer does not run on the appliance floor directly, but instead on the support rib.*
▶ Removing and inserting the bottom drawer: Carry out action steps (see 9.1.3 Bottom drawer) .

Removing drawer

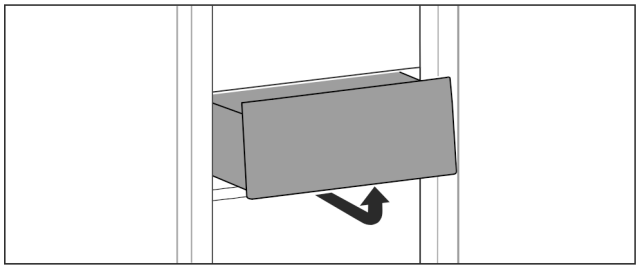

Fig. 45

▶ Remove drawer as shown in the diagram.

Inserting drawer

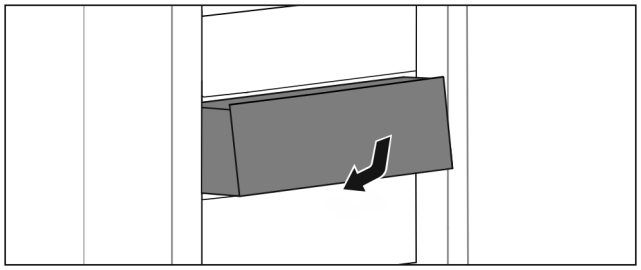

Fig. 46

▶ Insert drawer as shown in the diagram.

9.1.2 Drawer on telescopic rails*

The drawer runs on full-extension rails (telescopic rails). There are full-extension telescopic rails and telescopic rails with partial pull-out. Drawers which are full extension can be pulled out fully from the appliance. Drawers with partial pull-out cannot be pulled out fully from the appliance. The system in your appliance depends on the type of appliance.

Drawer on glass shelf*

The drawer guided on a glass shelf is a partial pull-out.

Removing drawer

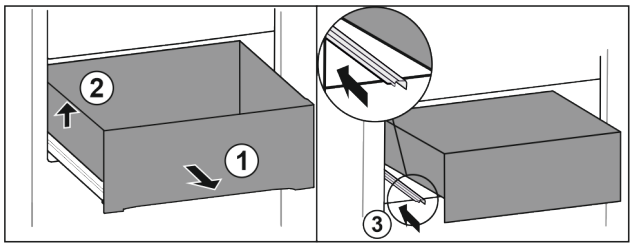

Fig. 47

▶ Pull out drawer as far as it will go. *Fig. 47 (1)*
▶ Lift drawer on the left. *Fig. 47 (2)*
▶ Slide in left rail. *Fig. 47 (3)*

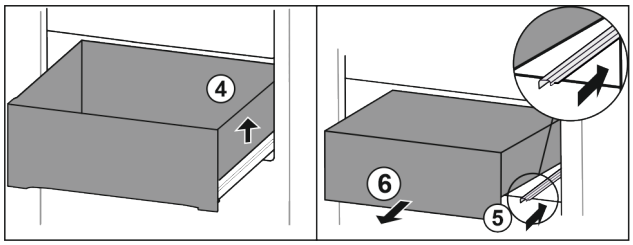

Fig. 48

▶ Lift drawer on the right. *Fig. 48 (4)*
▶ Slide in right rail. *Fig. 48 (5)*
▶ Remove drawer to the front. *Fig. 48 (6)*

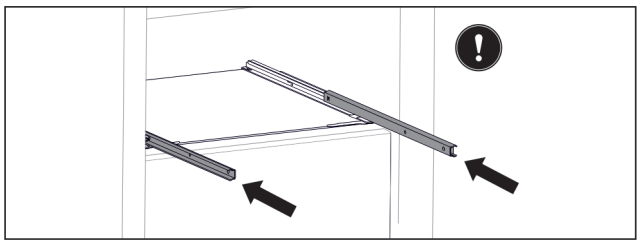

Fig. 49

If the rails are not yet fully pushed in after removing the drawer:

▶ Push the rails in completely.

Inserting drawer

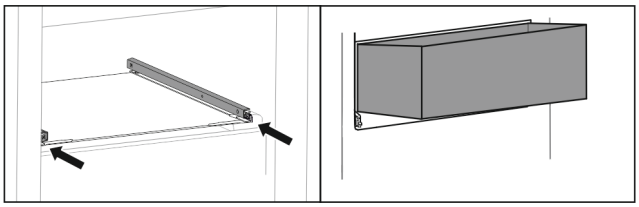

Fig. 50

▶ Slide rails in.
▶ Place drawer on rails at an angle.

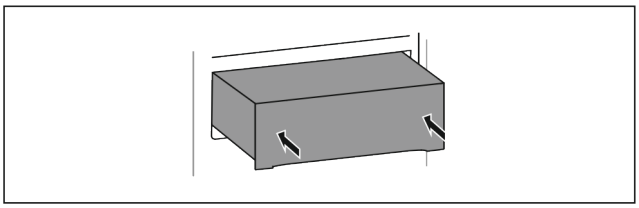

Fig. 51

▶ Lower drawer.
▶ Slide in drawer to the back.

9.1.3 Bottom drawer

The drawer is the lowest drawer in the appliance. It runs directly on the molded rib. There are no rails.

Removing drawer

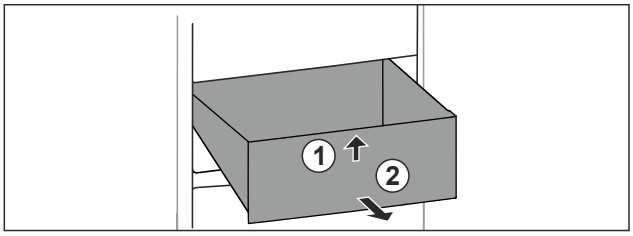

Fig. 52

▶ Pull out drawer as far as it will go.
▶ Lift up drawer at the front. *Fig. 52 (1)*
▶ Remove drawer to the front. *Fig. 52 (2)*

Inserting drawer

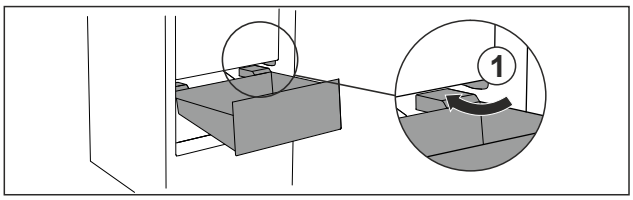

Fig. 53

▶ Guide drawer in at an angle around the stoppers *Fig. 53 (1)*.
▶ Lower the drawer.
▶ Slide in drawer to the back.

9.2 Glass shelves

You can remove the glass shelf under the drawers for cleaning.

You can remove the glass shelf under the drawers to use VarioSpace.

9.2.1 Removing / inserting the glass shelf

Make sure that the following requirements are fulfilled:

❑ Glass shelf under the drawer: Drawer has been removed. (see 9.1 Drawers)

Removing glass shelf

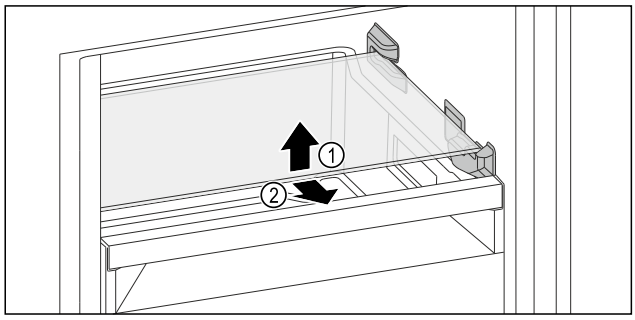

*Fig. 54 Example illustration of the glass shelf**

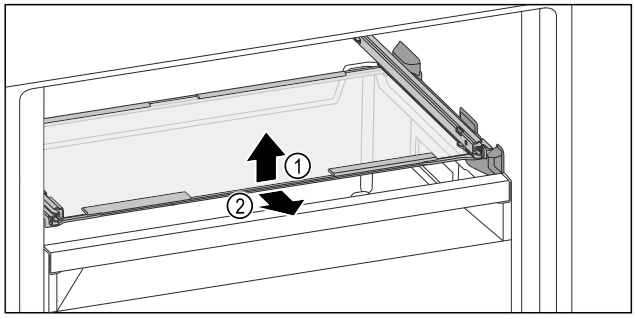

*Fig. 55 Example illustration of the glass shelf**

▶ Lift the front of the glass shelf.
▶ Remove the glass shelf from the front.

Inserting the glass shelf

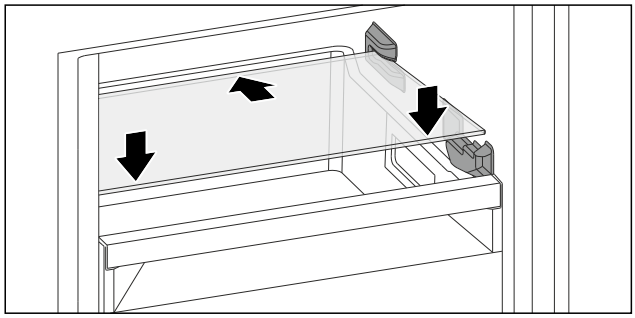

*Fig. 56 Example illustration of the glass shelf**

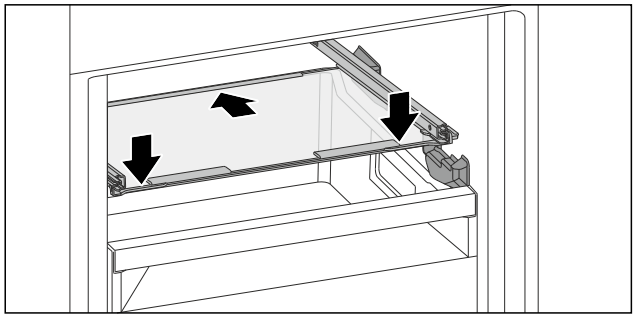

*Fig. 57 Example illustration of the glass shelf**

▶ Set down the glass shelf diagonally behind the stoppers.
▶ Lower glass shelf.
▶ Slide in glass shelf to the back.

9.3 VarioSpace

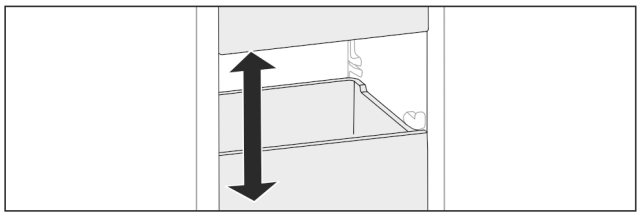

Fig. 58

You can remove drawers and glass panels from your appliance. This provides more room for large food items such as poultry, joints of meat, large game and bulky baked goods. You can then freeze these items whole for later preparation.

▶ Note the load limits on the drawers and glass panels (see 11.1 Technical specifications) .

10 Maintenance

10.1 Disassembling / assembling pull-out systems

10.1.1 Notes on disassembly

You can disassemble some of the pull-out systems for cleaning. Your appliance can contain a variety of pull-out systems.

The following pull-out systems can be disassembled or cannot be disassembled:

Pull-out system	can be disassembled / cannot be disassembled
Drawer on appliance base or glass shelf*	cannot be disassembled*
Drawer guided on glass shelf*	can be disassembled (see Drawer on glass shelf*) *
Bottom drawer	cannot be disassembled

10.1.2 Drawer on telescopic rails*

Drawer on glass shelf*

Disassembling pull-out system

Make sure that the following requirements are fulfilled:

❑ Drawer has been removed.
❑ Glass shelf has been removed. (see 9.2 Glass shelves)

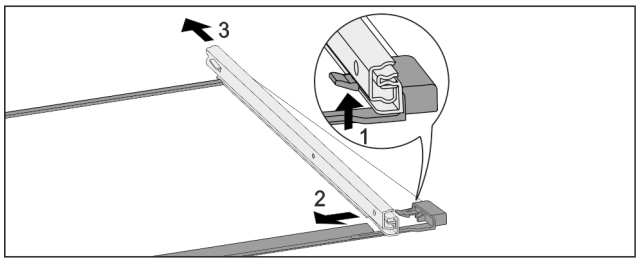

Fig. 59 Glass shelf with rails

▶ Push up front click-in hooks. *(1)*
▶ Slide pull-out rails to the side *(2)* and backwards *(3)*.

Installing pull-out system

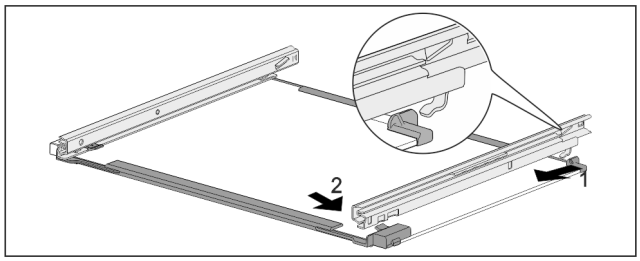

Fig. 60 Glass shelf with rails

▶ Hook in rail at the back. *(1)*
▶ Hook in rail at the front. *(2)*

*** Depending on model and options**

10.2 Defrosting the appliance

10.2.1 Defrosting with NoFrost

Defrosting is performed automatically by the NoFrost system. The moisture condenses on the evaporator and is periodically defrosted and evaporated.

The appliance does not need to be defrosted.

10.3 Cleaning the appliance

10.3.1 Preparation

WARNING
Danger of electric shock.
▶ Unplug refrigerator or disconnect power.

WARNING
Danger of fire
▶ Do not damage the refrigerant circuit.

▶ Empty appliance.
▶ Pull out the power plug.

10.3.2 Cleaning the housing

NOTICE
Improper cleaning!
Damage to the appliance.
▶ Only use soft cleaning cloths and ph-neutral all-purpose cleaners.
▶ Do not use steel wool or sponges that scour or scratch.
▶ Do not use caustic or abrasive cleaning materials or those containing sand, chloride, or acids.

WARNING
Risk of injury or damage due to hot steam.
Hot steam can cause scalding/burns and damage to surfaces.
▶ Do not use steam cleaners.

▶ Wipe the housing down with soft, clean cloth. If very dirty, use lukewarm water with a neutral cleaner. Glass surfaces can also be cleaned with glass cleaner.

10.3.3 Cleaning the interior

NOTICE
Improper cleaning!
Damage to the appliance.
▶ Only use soft cleaning cloths and ph-neutral all-purpose cleaners.
▶ Do not use steel wool or sponges that scour or scratch.
▶ Do not use caustic or abrasive cleaning materials or those containing sand, chloride, or acids.

▶ Plastic surfaces: clean by hand with a soft clean cloth, lukewarm water and a little detergent.
▶ Metal surfaces: clean by hand with a soft clean cloth, lukewarm water and a little detergent.

10.3.4 Cleaning the equipment

NOTICE
Improper cleaning!
Damage to the appliance.
▶ Only use soft cleaning cloths and ph-neutral all-purpose cleaners.
▶ Do not use steel wool or sponges that scour or scratch.
▶ Do not use caustic or abrasive cleaning materials or those containing sand, chloride, or acids.

Clean with a soft, clean cloth, lukewarm water and a little washing up liquid:

- Drawer
- Freezer tray

Clean with a damp cloth:*

- Retracting rails*
  Please note: the grease in the tracks is there for lubrication purposes and must not be removed!*

Clean in the dishwasher up to 60 °C:

- Ice cube tray

▶ Disassemble the equipment: see the relevant section.
▶ Clean the equipment.

10.3.5 After cleaning

▶ Wipe dry the appliance and items of equipment
▶ Connect and switch on the appliance.
▶ Activate SuperFrost (see 8.2 Appliance functions) .
When the temperature is sufficiently cold
▶ Place the food inside.
▶ Repeat cleaning regularly.

11 Customer support

11.1 Technical specifications

Temperature zone	
Freezing	-28 °C to -16 °C

Maximum amount of food to freeze / 24 hours	
Freezer	See type plate under “freezer capacity .../ 24 h”

Maximum load weight of equipment	
Equipment	Appliance width 600 mm (see installation instructions, appliance dimensions)
Drawer on glass shelf* (see 9.1.1 Drawer on appliance base or glass shelf) *	22 kg*
Drawer on glass shelf* (see 9.1.2 Drawer on telescopic rails*) *	22 kg*
Bottom drawer (see 9.1.3 Bottom drawer)	19 kg

Lighting	
Energy efficiency class[1]	Light source
This product contains one or more energy efficiency class G light sources.	LED

[1] *The appliance may contain light sources with different energy efficiency classes. The lowest energy efficiency class is indicated.*

For appliances with a WiFi connection:

Frequency specification	
Frequency band	2.4 GHz
Maximum radiated power	< 100 mW
Purpose of the wireless equipment	Integration in the local WiFi network for data communication

11.2 Operating noises

The appliance makes noises while in operation.

- At **less cooling output** the appliance saves energy but takes longer to cool items. The volume is **lower**.
- At **a higher cooling output** the food cools more quickly. The volume is **higher**.

  Examples:
  - Activated functions (see 8.2 Appliance functions)
  - Running fan
  - Freshly sorted food
  - High ambient temperature
  - Door opened for long periods

Noise	Possible cause	Type of noise
Bubbling and splashing	Coolant is flowing into the cooling circuit.	Normal noise
Spitting and hissing	Coolant is spraying into the cooling circuit.	Normal noise
Humming	The appliance cools. The volume depends on the cooling output.	Normal noise

Noise	Possible cause	Type of noise
Whirring and murmuring	The fan is running.	Normal operating noise
Clicking	Components are being switched on and off.	Normal switching noise
Rattling or humming	Valves are active.	Normal switching noise
Faint knocking, humming or buzzing*	The valve is active.	Normal operating noise

Noise	Possible cause	Type of noise	How to resolve
Vibration	Unsuitable setup	Error noise	Adjust the feet to make sure the appliance is horizontal.
Clattering	Equipment, Objects inside the appliance	Error noise	Secure equipment parts. Leave a gap between items.

11.3 Technical faults

Your appliance is designed and manufactured for reliable operation and a long service life. If a malfunction nonetheless occurs during operation, please check whether the malfunction is due to an operating error. In this case, you will have to be charged for the costs incurred, even during the warranty period.

You may be able to rectify the following faults yourself.

11.3.1 Appliance function

Defect	Cause	Remedy
The appliance does not work.	→ The appliance is not switched on.	▶ Switch on the appliance.
	→ The power plug is not properly inserted in the wall socket.	▶ Check the power plug.
	→ The powerfuse in the wall socket is not OK.	▶ Check the fuse.
	→ Power failure.	▶ Keep the appliance closed. ▶ Protect food: Place cold storage batteries on the food or use another freezer appliance if the power failure lasts longer. ▶ Do not re-freeze defrosted food.
	→ The IEC socket is not correctly plugged into the appliance.	▶ Check the IEC socket.

*** Depending on model and options**

Defect	Cause	Remedy
The temperature is not cold enough	→ This means that the door of the appliance is not closed properly	▶ Close the appliance door
	→ The ambient temperature is too high	▶ Problem solution: (see 1.2 Climate classes)
	→ The appliance was opened too frequently or for too long	▶ Wait to see if the required temperature corrects itself. If not, contact Customer Service. (see 11.4 Customer Service)
	→ Too much fresh food was placed inside without SuperFrost.	▶ Solution: (see SuperFrost)
	→ The temperature is incorrectly set	▶ Set to a colder temperature and check after 24 hours.
	→ The appliance is too near to a heat source (stove, heater etc).	▶ Change location of appliance or the heat source.
The temperature shown on the display is higher than the actual temperature inside the appliance.*	→ The appliance door was open too long, which automatically triggered the door alarm. The appliance cools more intensively as a result.	▶ Close the appliance door.
The door seal is defective or should be replaced for other reasons.	→ The door seal is interchangeable. You can replace it without the use of any special tools.	▶ Contact Customer Service. (see 11.4 Customer Service)
The appliance is iced up or condensation is building.	→ The door seal may have slipped out of its groove.	▶ Check the door seal is well placed in the groove.
The appliance is warm on the exterior surfaces.*	→ The heat of the refrigerant circuit is used to prevent condensate from forming	▶ This is normal.

11.3.2 Equipment

Defect	Cause	Remedy
The interior light does not turn on.	→ The appliance is not switched on.	▶ Switch on the appliance.
	→ The door was open for more than 15 minutes.	▶ If the door is open, the interior lighting switches off automatically after about 15 minutes.
	→ The LED interior light is faulty or the lid is damaged.	▶ Contact Customer Service. (see 11.4 Customer Service)

11.4 Customer Service

First check whether you can rectify the fault yourself (see 11 Customer support) . If you cannot rectify the problem, contact Customer Service.

You can find the address in the enclosed brochure “Liebherr-Service” or at home.liebherr.com/service.

WARNING
Unprofessional repair!
Injuries.
- ▶ Repairs and work on the appliance and the power supply cable not described in the Manual (see 10 Maintenance) should only be carried out by a qualified service provider.
- ▶ A damaged power cable may only be replaced by the manufacturer, the manufacturer’s Customer Service or a similarly qualified person.
- ▶ For appliances with an IEC connector, the change can be made by the customer.

11.4.1 Contacting Customer Service

Make sure that the following appliance information is available:

- ❑ Appliance name (model and index)
- ❑ Service no. (service)
- ❑ Serial no. (S no.)

▶ Refer to the type plate for appliance information. (see 11.5 Rating plate)
▶ Take note of the appliance information.
▶ Notify customer service: Report errors and the appliance information.
▷ This will help us give you fast and accurate support.
▶ Follow further instructions from Customer Service.

11.5 Rating plate

The nameplate is located behind the drawers on the inside of the appliance.

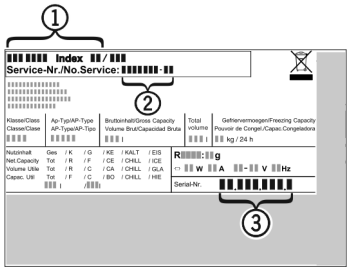

Fig. 61

(1) Appliance name
(2) Service no.
(3) Serial no.

▶ Information from the nameplate.

12 Decommissioning

▶ Empty appliance.
▶ Switch off appliance. (see Switching appliance off and on)
▶ Pull the power plug from the outlet.
▶ If necessary, remove the IEC socket: Pull the IEC socket out of the appliance plug while turning it to the left and right at the same time.
▶ Clean appliance. (see 10.3 Cleaning the appliance)
▶ Leave the door open to prevent unpleasant odors.

13 Disposal

Make sure that the following requirements are fulfilled:

- ❑ The meaning of the symbols on the appliance is known. (see 1.14 Symbols on the appliance)
- ❑ The information about disposal is known. (see 1.8 Disposal)

13.1 Prepare the appliance disposal

▶ Take the appliance out of operation. (see 12 Decommissioning)

13.2 Dispose of the appliance in an environmentally friendly way

WARNING

Leaking refrigerant and oil!
Fire. The refrigerant contained within the appliance is environmentally friendly, but flammable. The oil contained within the appliance is flammable. Escaping refrigerant and oil can ignite if they are of high enough concentration and are exposed to an external heat source.

▶ Do not damage the pipelines of the coolant circuit and the compressor.

▶ Observe the notes on appliance transport. (see 3.5 Transporting the appliance)
▶ Transport the appliance away without damaging it.
▶ Dispose of the appliance as specified.

Scan QR Code and find digital operating and installation instructions.

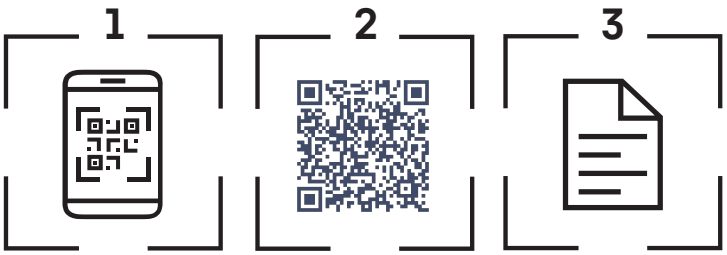

home.liebherr.com

20260401 7088642-00

Liebherr-Hausgeräte GmbH
Memminger Straße 77-79
88416 Ochsenhausen
Deutschland