witt

CIP60FS - CIMP60FS

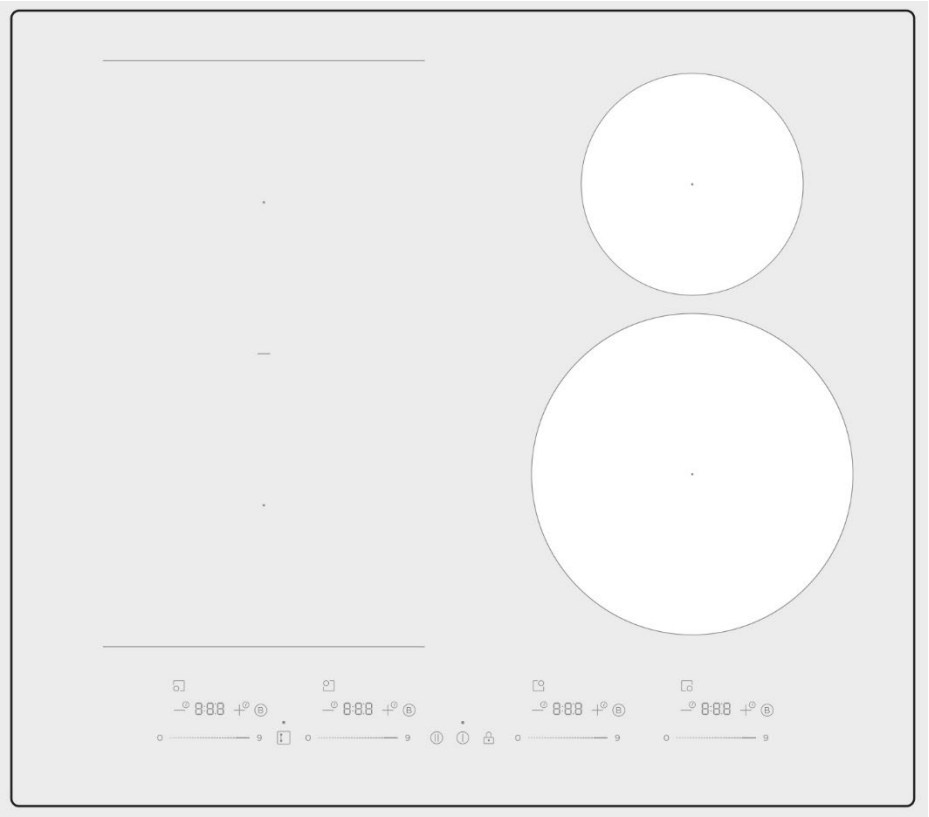

User Manual - Induction hob EN

WARNING: Please read these instructions carefully before using the appliance and keep them for future reference. Design and specifications are subject to change without prior notice as part of product improvements. Please contact your dealer for further information. The illustrations in this guide are for indicatory purposes only. The actual product may look different.

Thank you for choosing Witt.
We hope you enjoy your new product.

CONTENTS

SAFETY INSTRUCTIONS 4
SPECIFICATIONS 8
PRODUCT OVERVIEW 9
QUICK START GUIDE 10
INSTALLATION 13
HOW TO OPERATE....18
CLEANING AND MAINTENANCE 30
RESOLVING PROBLEMS 31
TRADEMARKS, COPYRIGHT AND LEGAL NOTICE 34
WARRANTY AND SERVICE....35
DISPOSAL AND RECYCLING....36

SAFETY INSTRUCTIONS

The following safety instructions are intended to prevent unforeseen risks or injuries resulting from incorrect or unsafe use of the appliance. Please check upon receipt that the packaging and the appliance are undamaged to ensure safe use.

If you notice any damage, please contact the retailer. Please note that, for safety reasons, no alterations or modifications to the appliance are permitted. Incorrect use may lead to dangerous situations and invalidate the warranty.

Explanation of symbols	
	DANGER This symbol indicates a risk to life and health due to an extremely flammable gas.
	WARNING – Electrical voltage This symbol indicates a risk to life and health due to electrical voltage.
	WARNING This signal word indicates a hazard of medium risk, which may result in death or serious injury if not avoided.
	CAUTION This signal word indicates a hazard with a lower level of risk, which may result in minor or moderate injury if not avoided.
	PLEASE NOTE This signal indicates important information (e.g. risk of property damage), but not a hazard.
	Follow the instructions This symbol indicates that the appliance must only be operated and maintained in accordance with the user manual.

Risk of electric shocks
Your safety is important, so please read these safety instructions before using the hob.

Installation
- Disconnect the appliance from the power supply before carrying out any work or maintenance.
- A proper grounded connection is required.
- Any alterations to the property's electrical installation must only be carried out by a qualified electrician.
- Failure to follow these instructions may result in electric shock or death.

Risk of cuts
- Please be careful – the edges of the panel are sharp.
- Failure to take care may result in personal injury or cuts.

IMPORTANT SAFETY INSTRUCTIONS

- Flammable materials or products must never be placed on the appliance.
- Please ensure that this information is available to the person installing the appliance, as this may reduce installation costs.
- To avoid danger, the appliance must be installed in accordance with these installation instructions.
- The appliance must only be installed and earthed by a qualified professional.
- The appliance must be connected to a power supply fitted with a switch that ensures it can be completely disconnected from the electric grid.
- Incorrect installation may invalidate the warranty or liability.
- If the main power supply cable is damaged, it must be replaced by the manufacturer, their service partner or a similarly qualified professional to avoid any risk.
- **WARNING:** If the surface is cracked, switch off the appliance to avoid the risk of electric shock. Applies to hobs with a glass-ceramic surface or similar materials that protect live parts.
- Metal objects such as knives, forks, spoons and lids may not be placed on the hob surface as they can get very hot.
- Do not use a steam cleaner to clean the hob.
- The device is not intended to be operated via an external timer or separate remote control system.
- **WARNING:** Fire hazard – do not leave any objects on the hob.
- Cooking must be supervised. Short-term cooking must be monitored constantly.
- **WARNING:** Leaving food to cook unattended in fat or oil can be dangerous and may cause a fire. NEVER try to put out a fire using water! Instead, switch off the appliance and smother the flames, for example with a lid or a fire blanket.
- **WARNING:** Only use safety devices for hobs that have been developed by the manufacturer of the appliance or are recommended in the user manual. Using unsuitable protective equipment may result in accidents.

Cleaning and maintenance

Risk of electric shocks

- Do not cook on a damaged or cracked hob. If the hob surface becomes damaged or cracked, switch off the power immediately and contact a qualified professional.
- Always switch off the power before cleaning or carrying out maintenance.
- Failure to follow these instructions may result in electric shock or death.

Health risks

- This appliance complies with current standards for electromagnetic safety.
- People with pacemakers or other electrical implants (e.g. insulin pumps) should contact their doctor or the implant manufacturer before using the device to ensure that the implant is not affected by the electromagnetic field.
- Failure to follow these instructions may result in death.

Risk of hot surfaces

- During use, parts of the appliance become so hot that they may cause burns.
- Avoid contact between your body, clothing or other objects (apart from suitable cookware) and the glass surface of the induction hob until it has cooled down.
- The handles on pots and pans can get hot. Make sure that the knobs do not protrude over other active cooking zones. Keep the handle out of the reach of children.
- Failure to follow these instructions may result in burns or scalding.

Risk of cuts

- The sharp blade of a hob scraper is exposed when the protective cap is pulled back. Use it with great care, and always keep it out of reach of children.
- Failure to take care may result in personal injury or cuts.

IMPORTANT SAFETY INSTRUCTIONS

- Never leave the appliance unattended during use. Overcooking can cause smoke to develop, and grease or food residues may catch fire.
- Never use the device as a worktop or as a place to store things.
- Never leave objects or kitchen utensils on the appliance.
- Do not place or leave magnetic objects (e.g. credit cards or memory cards) or electronic devices (e.g. computers or media players) near the appliance, as they may be affected by the electromagnetic field.
- Never use the appliance to heat up a room.
- Always switch off the cooking zones and the hob after using them as described in this user manual (i.e. using the touch controls). Do not rely on the pot detection feature to automatically switch off the cooking zones when you remove the cookware.
- Do not repair or replace any parts of the appliance unless specifically stated in this user manual. All other servicing must be carried out by a qualified professional.
- Do not place or drop heavy objects onto the hob.

- Do not stand on the hob.
- Do not use cookware with an uneven base, and avoid dragging cookware across the hob's glass surface, as this may scratch the glass.
- Do not use scouring pads or other abrasive cleaning products, as these may scratch the hob's glass surface.
- This device is intended for household use and similar applications such as:
  - - staff kitchens in stores, offices and other working environments,
  - farm properties
  - by guests at hotels, motels and other accommodation facilities
  - bed and breakfast-style settings
- **WARNING:** The device and its accessible parts become hot when in use.
- Do not touch the heating elements.

Child safety

- Accessible parts may become hot during use. Keep children away from the appliance while it is in use and while it is cooling down.
- This appliance may be used by children aged 8 years and over, as well as by persons with reduced physical, sensory or mental capabilities or lack of experience and knowledge, provided they are supervised or have received instruction on the safe use of the appliance and understand the risks involved in its use.
- Children must not play with the appliance or sit, stand or climb on it.
- Cleaning and maintenance may only be carried out by children if they are supervised.
- The appliance and its power cord must be kept out of the reach of children under 8 years of age.
- Do not store items that might be of interest to children in cupboards above the appliance. Children who climb on top of the hob plate may be seriously injured.
- Do not leave children alone or unsupervised near the appliance while it is in use.
- Children under the age of 8 must be kept away unless they are under constant supervision.

SPECIFICATIONS

Induction hob plate	**CIP60FS - CIMP60FS**
Number of cooking zones:	4 zones
Supply voltage	220–240 V AC, 50 Hz or 60 Hz
Total connected load:	7400 W
Product dimensions (L × W × H):	590 × 520 × 53 mm
Cut-out dimensions (A × B):	560 × 480 mm²

Weights and measurements are approximate. As we are constantly improving our products, we reserve the right to change specifications and designs without prior notice.

	Symbol	**Data**	**Unit**
Model identification	-	CIP60FS - CIMP60FS	
Hob type	-	Built-in induction hob	
Heating technology (induction hobs and cooking zones, traditional glass-ceramic hot zones, solid-surface hobs)	-	1 cooking area, 2 cooking zones	
Heating technology (induction hobs and cooking zones, including traditional glass-ceramic hot zones and solid-surface hobs)	-	Induction hubs and cooking zones	
For circular electric cooking zones: diameter of the effective heating area per cooking zone	Ø	Zone 1: 14.5 Zone 2: 21.0	cm
For non-circular electric cooking zones or areas: the length and width of the effective heating area per cooking zone or area	L, W	Area 1: L = 38.0 W = 21.0	cm
Energy consumption per hob or cooking zone, calculated per kg	Energy consumption:	Area 1: 184.6 Zone 1: 185.3 Zone 2: 174.8	Wh/kg
Energy consumption for the hob, calculated per kg	EC – energy consumption of the hob	181.6	Wh/kg

The data has been determined in accordance with standard EN 60350-2 and Commission Regulation (EU) No 66/2014.

If no operation is performed after switching on the hob, the appliance will automatically switch to standby mode after 1 minute. Power consumption in standby mode is 0.5 W.

PRODUCT OVERVIEW

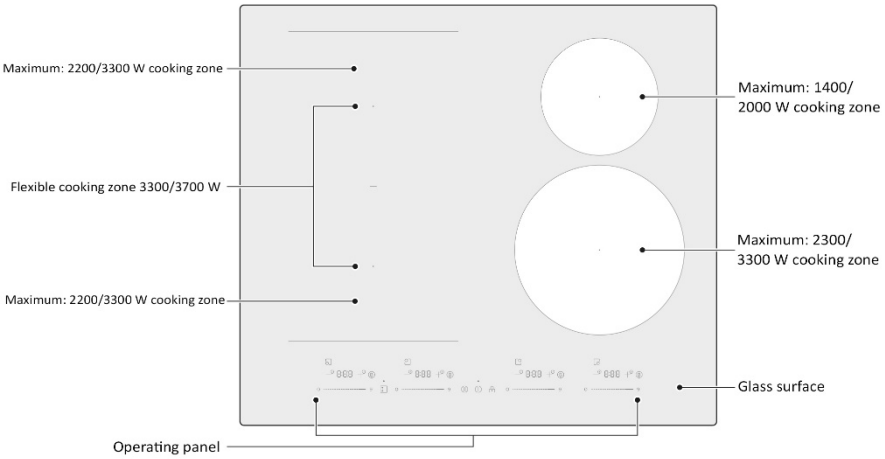

Operating panel

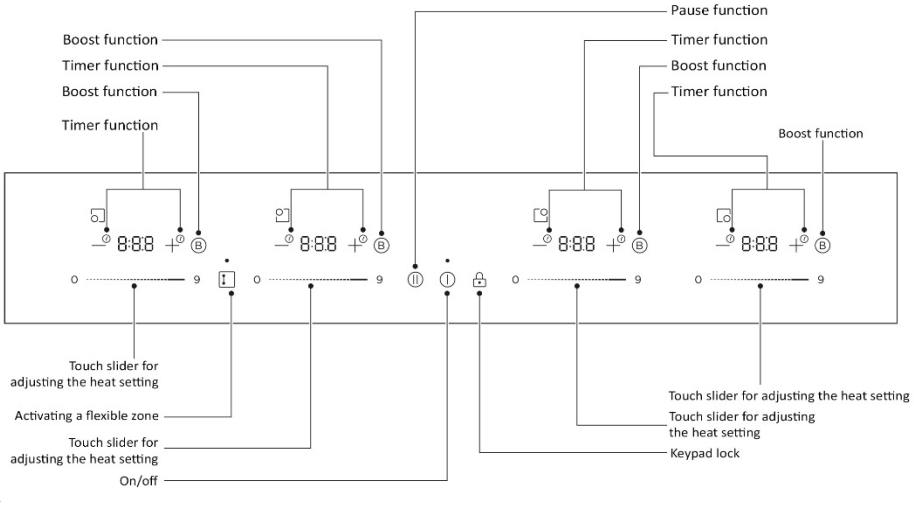

Please note: All illustrations in this user manual are for illustrative purposes only. The actual product may differ from the illustrations shown.

Function and mode of operation
Induction cooking is a safe, advanced, effective and energy-efficient cooking technology. It works by having electromagnetic fields generate heat directly within the cookware, rather than heating the glass surface indirectly. The glass surface only gets hot because the cookware transfers heat to it.

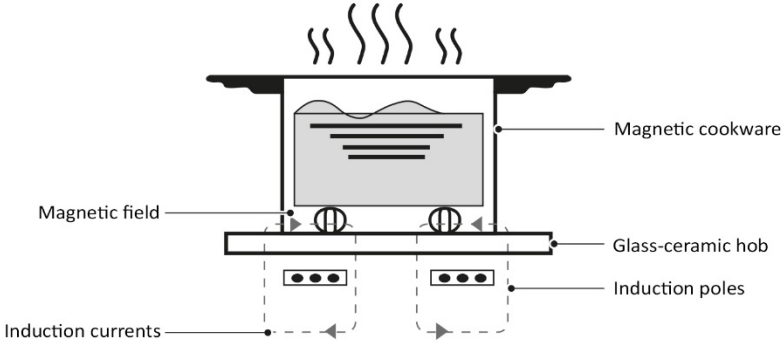

Before you start using your new induction hob
- Please read this user manual carefully, paying particular attention to the section on safety instructions.
- Remove any protective film from the induction hob.

QUICK START GUIDE

⚠ WARNING

Take care when frying, as oil and fat heat up very quickly, especially when using PowerBoost. At very high temperatures, oil and fat can spontaneously combust and therefore pose a serious fire hazard.

Cooking tips
- Once the food starts to boil, turn down the heat.
- Using a lid reduces cooking time and saves energy by retaining heat.
- Minimise the use of fluid or fat to reduce preparation times.
- Start cooking on a high setting, then reduce the heat once the food is cooked through.

Simmering and cooking rick

- Simmering takes place just below the boiling point, at around 85 °C, with small bubbles occasionally rising to the surface. This is essential for tasty soups and tender stews, as the flavours develop without the food being overcooked.
- Sauces made with eggs or thickened with flour should be cooked below the boiling point.
- Some dishes, including rice cooked using the absorption method, may require a higher heat setting than the lowest one to ensure they are cooked properly within the recommended time.

Cooking steak

How to cook juicy and tasty steaks:

1. Leave the meat to allow it to reach room temperature for about 20 minutes before cooking.
2. Heat a frying pan with a heavy base.
3. Brush both sides of the steak with oil. Add a small amount of oil to the hot pan, then place the meat in it.
4. Turn the steak once during cooking. The exact cooking time depends on the thickness of the steak and how well done you want it. The time may vary from approximately 2 to 8 minutes per side. Gently press the steak to check how well done it is – the firmer it feels, the more well done it is.
5. Let the steak rest for a few minutes on a warm plate before serving so that it becomes more tender.

Stir-frying

1. Select a flat-bottomed wok or a large frying pan compatible with induction stoves.
2. Make sure you have all the ingredients and utensils ready. Stir-frying must be done quickly. If cooking large quantities, prepare the food in several smaller batches.
3. Preheat the pan briefly and add two tablespoons of oil.
4. First cook the meat, set it aside and keep it warm.
5. Stir-fry the vegetables. Once they are hot but still crisp, reduce the heat. Return the meat to the pan and add the sauce.
6. Gently stir the ingredients so that they heat through evenly.
7. Serve immediately.

Registration of small objects

- If a pan of an unsuitable size or material (e.g. aluminium) or a small object (e.g. a knife, fork or key) is placed on the hob, the hob will automatically switch to standby after 1 minute. The fan continues to cool the induction hob for a further minute.

Heat stages

The settings below are for guidance only. The exact setting depends on several factors, including your cookware and the amount of food you are cooking. Experiment to find the settings that work best for your induction hob.

Heat stages	How to use
1-2	• Gentle heating of small quantities of food • Melting chocolate, butter and foods that quickly get burnt • Light simmer • Slow heating
3-4	• Reheating • Quick simmer • Cooking rice
5-6.	• Pancakes
7-8.	• Sautéing • Cooking pasta
9/P	• Stir-frying • Browning/frying over a high heat • Making soup • Boiling water

INSTALLATION

Cut-out
Cut a hole in the worktop according to the dimensions shown in the drawing.
For installation and use, there must be a clearance of at least 5 cm around the cut-out. Make sure the worktop is at least 30 mm thick. Choose a heat-resistant and insulating worktop (wood and similar fibrous or hygroscopic materials must not be used unless they have been impregnated) to avoid electric shock and warping caused by heat radiation from the hob. See the illustration below.

⚠ **Please note:** The clearance between the sides of the hob and the inner surfaces of the worktop must be at least 3 mm.

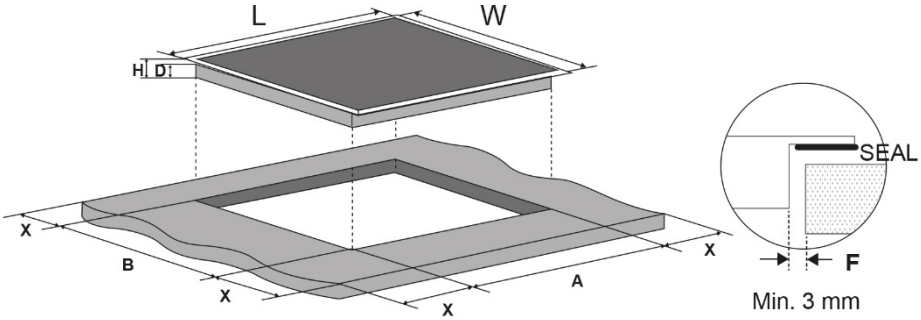

L (mm)	W (mm)	H (mm)	D (mm)	A (mm)	B (mm)	X (mm)	F (mm)
590.	520	53.	49.	560±1	480±1	50 min.	3 min

In all cases, ensure that the induction hob is adequately ventilated and that the air inlets and outlets are not blocked. Make sure that the induction hob is in good working order. See the illustration below.

⚠ **Please note:** The safety distance between the hob place and a cabinet above it should be at least 760 mm.

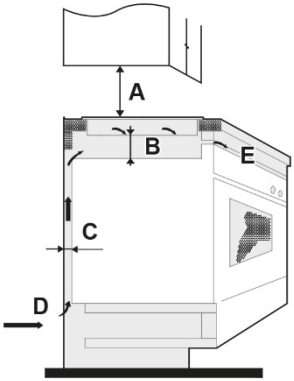

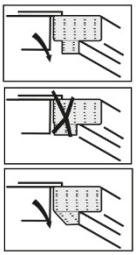

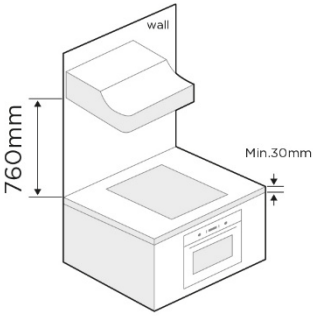

A (mm)	B (mm)	C (mm)	D	E
760	15 minutes	20 min.	Air intake	Air vent (2 mm)

WARNING: Ensure there is adequate ventilation
Ensure that the induction hob is adequately ventilated and that the air inlets and outlets are not blocked. To avoid accidentally touching the underside of the hob, which can become very hot, or the risk of electric shock during use, it is necessary to fit a wooden panel secured with screws at a distance of at least 15 mm from the underside of the hob. See the requirements below.

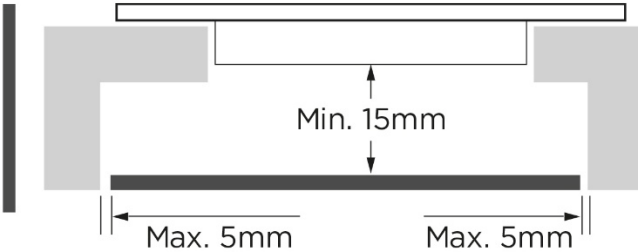

⚠ There are ventilation openings around the hob. IT IS IMPORTANT that these openings are not blocked by the worktop during installation.

- Please note that adhesives used on plastic or wooden materials in kitchen furniture must be able to withstand temperatures of at least 150 °C to prevent the finishes from peeling.
- The rear wall and adjacent and surrounding surfaces must be able to withstand temperatures of up to 90 °C.

Before installing the hob, ensure that:

- The worktop must be flat and level, and no structural components must obstruct the required clearances.
- The worktop must be made of a heat-resistant and insulating material.
- If the hob is installed above an oven, the oven must be fitted with a built-in cooling fan.
- The installation must comply with all clearance requirements as well as applicable standards and regulations.
- A suitable circuit breaker that ensures complete disconnection from the mains supply must be integrated into the fixed installation and fitted in accordance with the applicable installation regulations.
- The circuit breaker must be of an approved type and ensure a contact gap of at least 3 mm on all poles (or on all live [phase] conductors, if permitted by local installation regulations).
- The circuit breaker must be easily accessible to the user once the hob has been installed.
- If you are unsure about the installation requirements, please contact your local authorities or consult the building regulations.
- Use heat-resistant and easy-to-clean surfaces (e.g. ceramic tiles) on the walls around the hob.

Before fitting the worktop, the sealing strip must be fitted to the back of the glass panel:

- Turn the appliance upside down so that the back of the glass plate is facing upwards.
- Remove the foam strip from the self-sealing bag and peel off the protective film from the double-sided tape on the back of the foam strip.
- Attach the foam strip to the back of the glass panel.
- The foam strip must not extend beyond the edge of the glass panel.

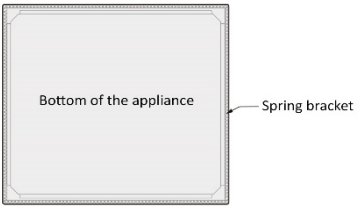

After installing the hob, ensure that:

- The power cable is not accessible through cabinet doors or drawers.
- There is an adequate supply of air from the kitchen unit to the underside of the hob.
- If the hob is installed above a drawer or cupboard, a heat shield needs to be fitted underneath the hob.
- The circuit breaker is easily accessible to the user.

Before fitting the mounting brackets

The device must be placed on a stable and even surface (use the packaging). Do not press the controls that protrude from the hob.

Adjusting the position of the bracket
Secure the hob to the worktop by inserting 4 brackets into the underside of the hob (see illustration) before installation.
Adjust the position of the bracket to suit different worktop thicknesses.

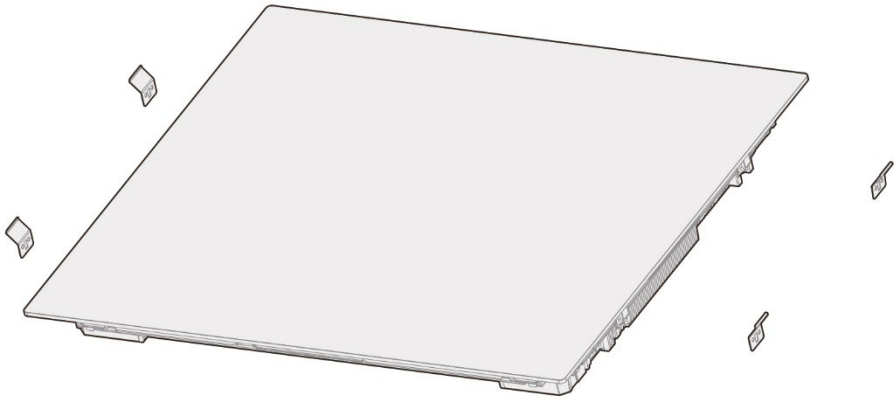

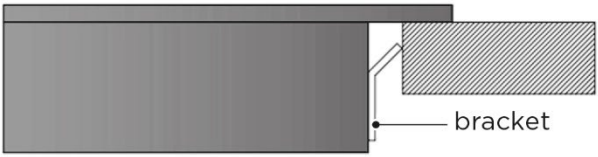

⚠ Under no circumstances must the fittings come into contact with the inner surfaces of the worktop after installation (see illustration).

CAUTION
1. The induction hob plate must be installed by qualified personnel or technicians. Installation must not be carried out by the user.
2. The hob plate must not be installed directly on top of a dishwasher, refrigerator, freezer, washing machine or dryer as the moisture may damage the electronic components of the hob plate.
3. The induction hob must be installed to ensure optimum heat dissipation, thereby guaranteeing high reliability.
4. The wall and the area above the worktop must be able to withstand heat.
5. To prevent damage, the laminate and adhesive must be heat-resistant.
6. Do not use a steam cleaner.

Connecting the hob to the power supply

⚠ The hob must only be connected to the power supply by a qualified electrician.

Before connecting the hob to the power supply, please verify the following:

1. That the fixed electrical installation is suitable for the hob's power consumption.
2. That the voltage corresponds to the value stated on the type plate.
3. That the power supply cable is of a suitable size for the load specified on the rating plate.

Do not connect the hob to the power supply using adaptors, splitters or extension leads, as this may cause overheating and a fire.

The power supply cable must not come into contact with hot parts and must be positioned so that the temperature does not exceed 75 °C at any time.

⚠ If you are unsure whether the fixed electrical installation is suitable, please contact a qualified electrician. Any modifications must only be carried out by a qualified electrician.

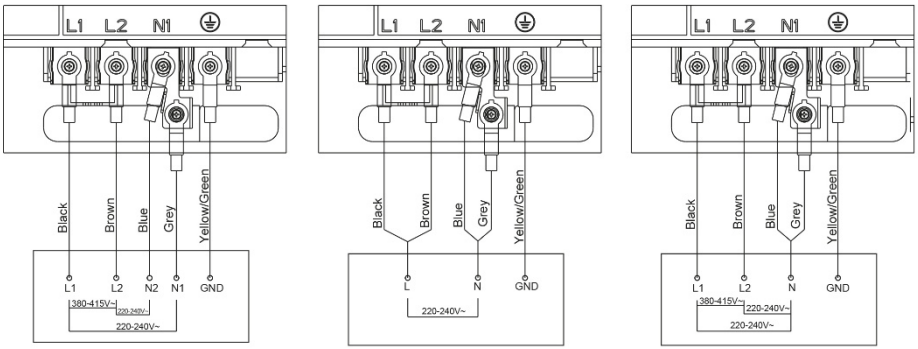

- If the cable is damaged or needs replacing, the work must be carried out by an authorised service technician using the correct tools to avoid any risk.
- If the appliance is connected directly to the power supply, a multi-pole switch with a contact gap of at least 3 mm between the contacts must be installed.
- The installer must ensure that the electrical connection has been carried out correctly and complies with the applicable safety regulations.
- Do not bend or pinch the cable.
- The cable must be checked regularly and may only be replaced by authorised professionals.

⚠ The underside of the hob and the power supply cable must not be accessible after installation.

HOW TO OPERATE

Touch screen

- The controls are touch-sensitive, so there is no need to press hard.
- Use the tip of your finger – not the side of your finger.
- You will hear a beep every time a touch is detected.
- Make sure that the control panel is always clean and dry and that there are no objects (e.g. kitchen utensils or cloths) on it. Even a thin film of water can make it difficult to operate.

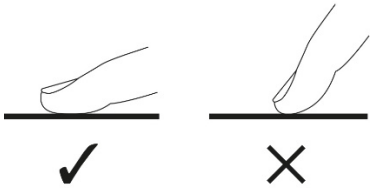

Choosing suitable cookware

- Only use cookware that is suitable for induction hobs. Look for the induction symbol on the packaging or at the bottom of the cookware.
- You can check whether your cookware is suitable by holding a magnet against the base. If the magnet sticks, the cookware is suitable for induction hobs.

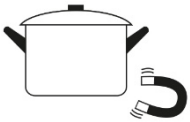

- If you do not have a magnet:
  1. Pour a little water into the pan.
  2. If U is not flashing in the display and the water is heating up, the cookware is suitable.
- Cookware made from the following materials is not suitable: plain stainless steel without a magnetic base, aluminium or copper without a magnetic base, glass, wood, porcelain or ceramic.

- Cookware with a base containing aluminium.
- This reduces the ferromagnetic area, which means that less power is transferred to the cookware. This cookware may not be detected correctly, or at all, and may therefore not heat up sufficiently.

- Do not use cookware with uneven edges or a curved base.

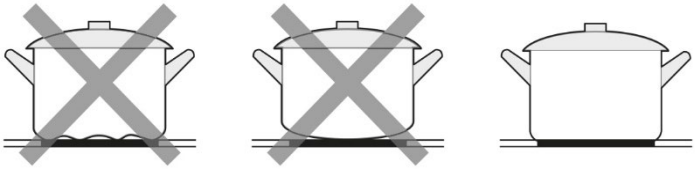

- Make sure that the base of the pan is smooth, lies completely flat against the glass surface and is the same size as the cooking zone. Use cookware with a diameter that is equal to or larger than the mark for the selected cooking zone. Cookware with a slightly larger diameter makes the most efficient use of energy. If smaller pans are used, efficiency may be lower than expected. Cookware with a diameter of less than 140 mm may not be detected by the hob. Always place the cookware in the centre of the cooking zone.

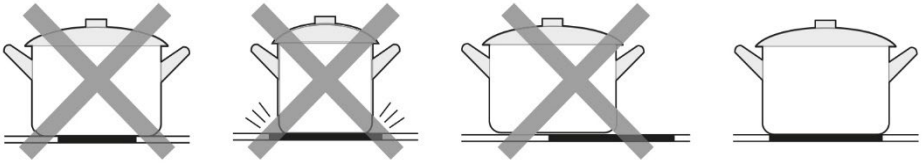

- Always lift cookware off the induction hob – avoid sliding it, as this may scratch the glass surface.

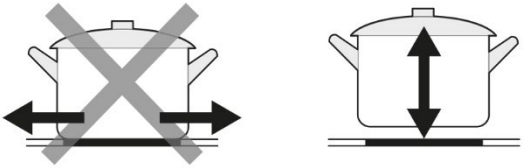

Pan size

The cooking zones automatically adjust to the diameter of the pan within certain limits. However, the base of the pan must have a minimum diameter that is suitable for the cooking zone in question. To get the best performance from the hob, place the pan in the centre of the cooking zone.

Cooking zone	Base diameter for induction-compatible cookware	
	Minimum (mm)	Maximum (mm)
1.2	120	220
3	100	150
4	140	210
Flexible induction zone	210	220×380

How to use the hob

1. Start cooking

1. Press the on/off button and hold it down for a moment. When the hob is switched on, a beep sounds and all displays show “--”, indicating that the hob is in standby mode.

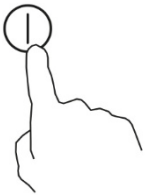

2. Place suitable cookware on the cooking zone you wish to use.
   a. Make sure that the bottom of the cookware and the surface of the cooking zone are clean and dry.

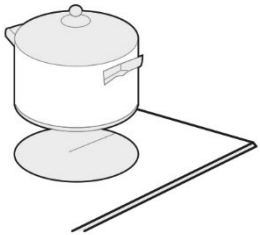

3. Each cooking zone has its own independent slider, boost and timer function, allowing you to control the power settings and timer individually.

4. Adjust the heat setting by touching the slider.
   - If you do not select a heat setting within 20 seconds, the induction hob will switch off automatically. You will then need to start again from step 1.
   - You can change the heat setting at any time during cooking.

If U flashes alternately with the heat setting

This means that:

- cookware has not been placed on the correct cooking zone, or
- the cookware used is not suitable for induction hobs, or
- the cookware is too small or not placed in the centre of the cooking zone.

The cooking zone will not heat up unless there is suitable cookware on it.

The display switches off automatically after 2 minutes if no suitable cookware is detected.

2. Finish cooking

1. Touch the slider for the relevant cooking zone all the way to the left and make sure the display shows “0”. After 3 seconds, the cooking zone switches off and the display shows “-”.

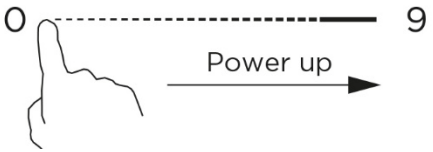

2. Turn off the entire hob plate by touching the ON/OFF button.

3. Please be aware of hot surfaces
   “H/h” indicates which cooking zones are hot to the touch. The indicator disappears once the surface has cooled to a safe temperature.

   It can also be used as an energy-saving feature – if you want to heat several pots, you can use a cooking zone that is still warm.

3. Using the boost function

Activating the boost

1. Press the ON/OFF button. When the hob is switched on, it emits a beep and the display shows “-”, indicating that the hob is in standby mode.

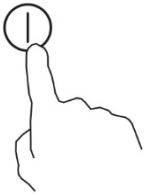

2. Tap the Boost button “B”. The zone indicator displays a continuous line, and the effect is increased to the maximum.

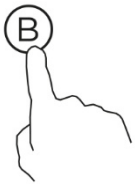

Disabling the boost function

1. In Boost mode, operating the slider will deactivate the Boost function, and the selected heat setting will appear on the display.

2. Once the Boost time has elapsed, the Boost function ends automatically and the cooking zone returns to the heat setting that was selected before Boost was activated.
   If the original heat setting was 0, it will switch to level 9.

Please note

- This function can be used on all cooking zones.
- The cooking zone returns to the original heat setting after 10 minutes.

- The flexible cooking zone returns to the original heat setting after 5 minutes.
- If Boost is activated on one cooking zone and another cooking zone is switched on, the first one is automatically reduced to level 9 – and vice versa.
- If the initial heat setting is 0, it will switch to level 9 after 10 minutes.

4. Flexible area

- The flexible zone can be used either as a single cooking zone or as two separate cooking zones, depending on your needs.
- The flexible zone consists of two independent induction fields, which can be controlled separately.
  When used as a single zone, the part not covered by cookware switches off automatically after 8 seconds.
  Avoid placing unsuitable cookware in the centre of the flexible zone.
- To ensure that cookware is positioned correctly and heat is distributed evenly, it must be placed correctly:
  - At the front or back of the flexible zone if the diameter of the cookware is less than 21 cm.
  - At the front or back of the flexible zone if the diameter of the cookware is less than 22 cm.
  - Larger pots and pans can be placed anywhere on the hob.

As a single cooking zone

1. To activate the flexible zone as a single large cooking zone, press the flexible zone button.

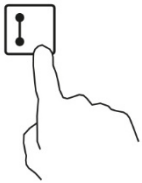

The power setting works in the same way as on a standard cooking zone.

If the pan is moved from the front to the back (or vice versa), the flexible zone automatically detects the new position and maintains the same heat output.

To add another pan, press the relevant function key again so that the pan is detected.

As two separate zones

1. To use the flexible zone as two separate cooking zones with individual power settings, press the relevant function key. Do not place unsuitable cookware in the centre of the flexible zone.

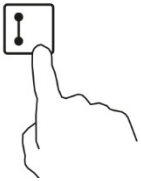

Examples of correct and incorrect placement of cookware

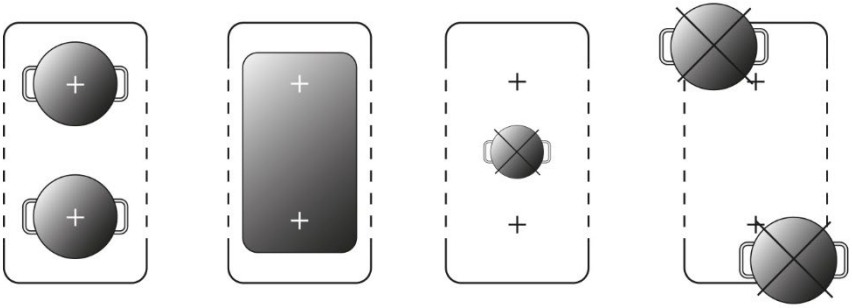

Arrange the cookware according to size:

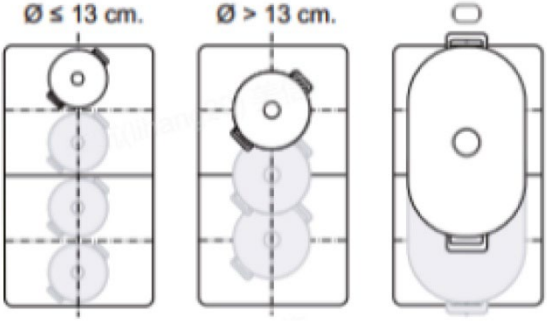

5. Keypad lock

- You can lock the control panel to prevent accidental use (e.g. children switching on the cooking zones).
- When the control panel is locked, all buttons are disabled except for the on/off button.

Enabling the keypad lock	
Press and hold the lock button.	The display will show “Lo”
Disabling the keypad lock	
Press and hold the lock button.	

When the hob is locked, all control functions are disabled except for the on/off button. In an emergency, the hob can always be switched off using the on/off button, but it must be unlocked again before it can be operated.

6. Timer functions

- Each cooking zone has separate buttons for increasing and decreasing the timer setting.
- Press the button briefly to increase or decrease the time by 1 minute, and hold the button down to increase or decrease the time by 10 minutes.
- In flexible mode, the timer buttons for the corresponding cooking zones can control the time for the flexible zone.
- If a timer has been set in flexible mode and the function is deactivated, the timer on the front cooking zone remains active.
- When flexible mode is enabled, the timer function is disabled by default.
- The maximum time that can be set is 8:00.
- The maximum duration for the current heating stage corresponds to the standard duration for that heating stage. See the section on standard operating hours for further information.
- When the timer is activated, the display shows only the current time. Tap the slider to view the current heat setting, and adjust the heat setting by sliding your finger across the slider.

1. When the timer is set to 0, the heat setting display will automatically switch off after 3 seconds if no action is taken.

2. Time extension button: both short and long presses are supported.

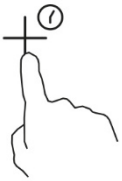

3. Time reduction button: both short and long presses are supported.

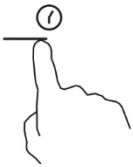

4. Press the 'Increase time' and 'Decrease time' buttons at the same time to cancel the timer.

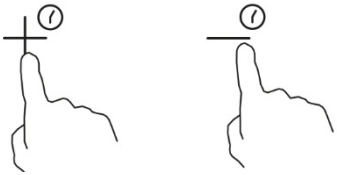

7. Pause mode

1. When the cooking zones are in use, press the “II” button. All displays show “ ”, and heating continues at level 2.
   At this point, only the “lock button”, the “II” button and the ON/OFF button can be operated.
2. Tap the “II” button again. The display will show the original settings, and the cooking zones continue to heat up.

8. Moving cookware

When the hob is switched off, press and hold the on/off button to switch the hob on. Within 10 seconds, press and hold the LF time reduction button for 3 seconds to enable or disable the pot-moving function.

1. When the LF display shows “On”, the pot-shifting function is activated.
2. When the LF display shows “OF”, the pot-shifting function is disabled.
3. The pot-shifting function is not active when a cooking zone is in Boost mode.
4. Once a move has been confirmed, both the time setting and the heat setting are transferred.

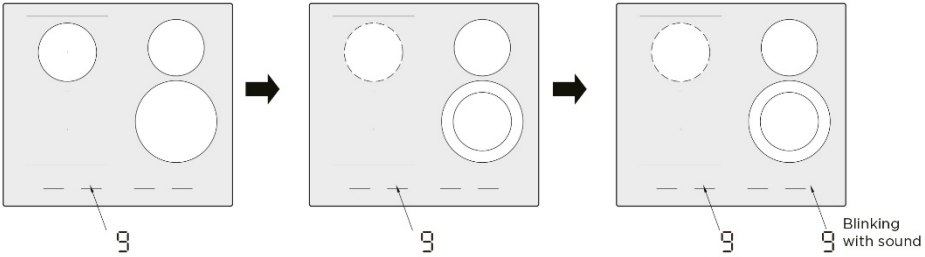

Turn on the left-rear cooking zone (LR). The left-rear cooking zone is set to level 9.

Once the heat has stabilised, move the pan from the rear left cooking zone to the front right cooking zone (RF).

The front right cooking zone will flash while the heat setting from the rear cooking zone hob is being transferred.

Confirmation

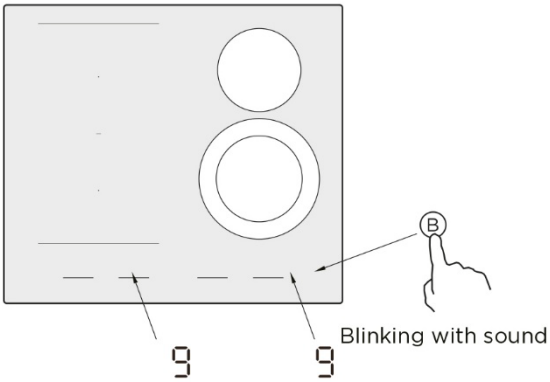

Press the Boost button for the flashing cooking zone to confirm the transfer.

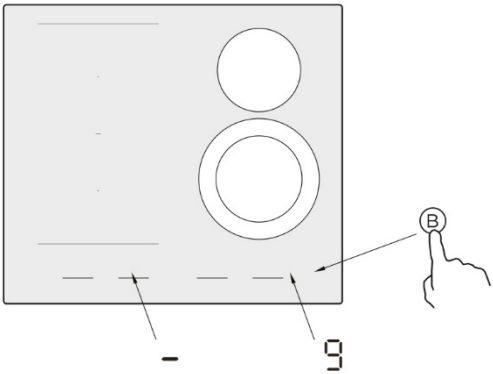

The front right cooking zone is now heating at the same temperature as the rear left cooking zone.

Cancellation / no confirmation

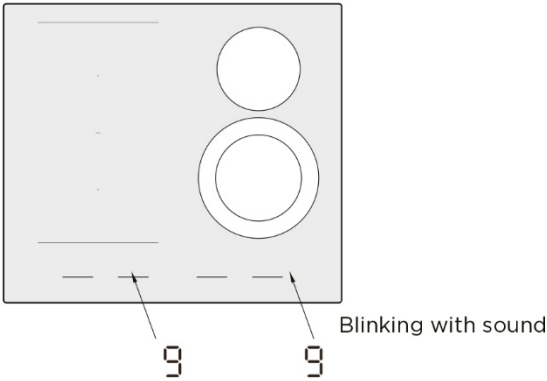

1. If no cookware is detected within 6 seconds, this will be shown on the display.
2. After 10 seconds, the flashing stops and an audible signal is emitted.

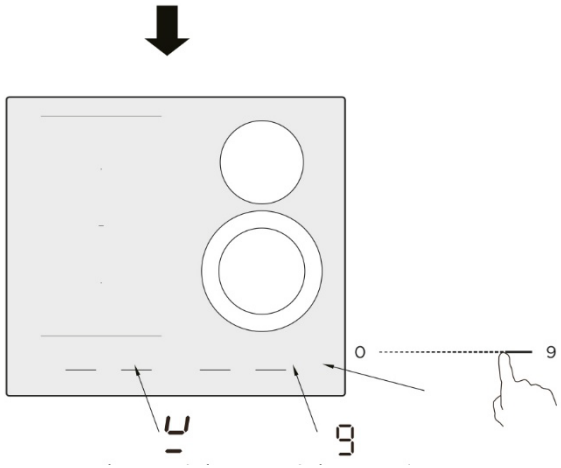

Slide the control for the front right cooking zone to cancel the transfer and continue heating at the selected heat setting.

9. Standard operating times

The automatic switch-off is a safety feature on the induction hob. The function switches off automatically if you forget to turn off the cooking process. The standard operating times for the various heating stages are shown in the table below.

Heat stages	Pause	1	2	3	4	5	6	7	8	9
Standard operating time (hours)	8	8	8	6	6	4	4	2	2	15

When the cookware is removed, the induction hob stops heating immediately and switches off automatically after 1 minute.

⚠ People with pacemakers should contact their doctor before using the appliance.

CLEANING AND MAINTENANCE

What	How	Important
Everyday dirt on glass (fingerprints, marks, food stains or non-sugary spills on the glass surface).	1. Switch off the hob. 2. Apply a hob cleaning agent while the glass surface is still warm (but not hot!). 3. Rinse and wipe dry with a clean cloth or kitchen roll. 4. Switch the hob back on.	• When the hob is switched off, the residual heat indicator is not displayed, but the cooking zone may still be hot. Please exercise extreme caution. • Stiff scouring pads, certain nylon sponges and harsh or abrasive cleaning products can scratch the glass surface. Always read the manufacturer's instructions to ensure that the cleaning product or sponge is suitable. • Never leave any cleaning product residue on the hob, as this may cause stains on the glass surface.
Boiling over, melted residue and hot sugary spills on the glass surface.	Remove immediately using a palette knife, putty knife or a scraper suitable for glass-ceramic hobs – please note that the cooking zones may be hot: 1. Switch off the hob at the wall socket. 2. Hold the spatula or utensil at an angle of about 30° and scrape any dirt or spills towards a cooler part of the hob. 3. Wipe away any dirt or spills with a cloth or kitchen roll. 4. Follow steps 2–4 under "Everyday dirt on glass" above.	• Remove any residue from melted materials and sugary foods or spills as soon as possible. If it is left to cool on the glass surface, it may be difficult to remove and, in the worst case, could cause permanent damage to the glass. • Risk of cuts: When the protective cap is pulled back, the blade in the scraper is very sharp. Use it with great care, and always keep it out of reach of children.
Stains on the touchscreen controls.	1. Switch off the hob. 2. Mop up the spill. 3. Wipe the area around the touch controls with a clean, damp sponge or cloth. 4. Dry the area thoroughly with kitchen roll. 5. Switch the hob back on.	• The hob may beep and switch off automatically, and the touch controls may stop responding if there is liquid on them. • Make sure the area around the touch controls is completely dry before switching the hob back on.

RESOLVING PROBLEMS

Using the appliance may result in faults or malfunctions. The table below lists possible causes and provides instructions for resolving error messages or operational issues. We recommend that you read the table carefully to save time and avoid unnecessary costs when contacting the service centre.

Problem	Potential cause	Potential solution
The hob plate cannot be turned on.	No power supply	Check that the hob is connected to a power supply and that the power supply is switched on. Check the fuses and the circuit breaker.
The touchscreen is not responding	The control panel is damp or covered with objects	Make sure the control panel is clean and dry and remove any objects.
The touchscreen is difficult to use	There is water on the control panel else or you are using your finger incorrectly	Wipe the control panel dry, using your fingertip (not the side of your finger).
The glass surface is becoming scratched.	Cookware with rough edges. Inappropriate scouring pads or abrasive cleaning products are used.	Use cooking gear with a flat and smooth bottom. See the section on choosing suitable cookware. See the section on cleaning and maintenance.
Some pots are making crackling or clicking sounds.	This may be due to how the cooking gear is made (potentially with layers of different materials that vibrate at different frequencies).	This is normal for certain types of cookware and is not a sign of an error.
The induction hob emits a low humming sound at high heat settings.	This is due to induction technology.	This is normal, but the noise should become quieter or disappear completely when the heat setting is turned down.
There is a fan noise coming from the induction hob.	A cooling fan in the induction hob has started up to prevent the electronics from overheating. It can continue to run after the hob has been switched off.	This is normal and you do not need to do anything about it. Do not switch off the power to the induction hob at the wall socket whilst the fan is running.
The cookware does not heat up, and U is shown on the display.	The induction hob cannot detect the cookware because it is not suitable for induction. The induction hob cannot detect the cookware because it is too small for the cooking zone or is not correctly centred.	Use cookware that is suitable for induction hobs. See the section on choosing suitable cookware. Centre the cookware and make sure the base matches the size of the cooking zone.

Problem	Potential cause	Potential solution
The induction hob or a cooking zone has switched off unexpectedly; an alarm will sound and an error code will be displayed (typically alternating between one or two digits in the timer display).	Technical errors.	Make a note of the error letters and numbers, switch off the power to the induction hob at the wall socket and contact a qualified professional.

Error display and control

The induction hob is equipped with a self-diagnostic function. This feature allows a technician to check the operation of several components without having to dismantle or remove the hob from the worktop.

Problem solving

Problem	Potential cause	Potential solution
E1, E2, E7	Temperature sensor fault	Contact us
E3, E4	Temperature sensor for IGBT faults	Contact us
EU	The connection between the display circuit board and the circuit board has been lost	Contact us
EL, EH	Abnormal power supply voltage	Make sure that the power supply is working as normal. Switch the hob back on once the voltage has returned to normal.
C1	The hob's temperature sensor is too high	Restart the hob once it has cooled down.
C2	The temperature sensor for the IGBT is too high	Restart the hob once it has cooled down.
F5, F6	Ventilator error	Contact us
EC	Overflow error	Check whether there is any liquid in the control area. Clean and dry the area.

Specific errors and solutions

Error	Problem	Solution A	Solution B
The display does not turn on when the device is connected.	No power supply.	Check that the plug is properly inserted into the socket and that the socket is working.	
	Connection fault between the secondary power circuit board and the display circuit board.	Inspect the connection.	
	The secondary power circuit board is damaged.	Replace the secondary power circuit board.	
	The display printed circuit board is damaged.	Replace the display printed circuit board.	
Some buttons are not working or the display is behaving abnormally.	The display printed circuit board is damaged.	Replace the display printed circuit board.	
The cooking indicator lights up, but the heating does not start.	High temperature on the hob plate.	The ambient temperature may be too high. The air intake or ventilation may be blocked.	
	Something is wrong with the ventilator.	Check that the fan is working properly. If not, replace the fan.	
	The printed circuit board is damaged.	Replace the printed circuit board.	
The heating stops suddenly when the hob is used and the display is showing a blinking “u”.	The cookware is not suitable. The pot is too small.	Use the correct cookware (see the instructions for use).	
	The hob plate is overheated.	Wait until the temperature returns to normal. Press “ON/OFF” to restart the device.	The pot detection circuit is damaged; replace the circuit board.
Cooking zones on the same side (e.g. the first and second zones) display “u”	Connection fault between the circuit board and the display circuit board.	Inspect the connection.	
	The communications section of the display circuit board is damaged.	Replace the display printed circuit board.	
	The printed circuit board is damaged.	Replace the printed circuit board.	
The fan motor is making an unusual noise.	The fan motor is damaged.	Replace the fan.	

The above covers the assessment and checking of common errors.

Do not dismantle the appliance yourself to avoid danger and damage to the induction hob.

TRADEMARKS, COPYRIGHT AND LEGAL NOTICE

The Witt logo, word marks, company name, trade dress and all versions thereof are valuable assets belonging to Witt and/or its affiliated companies (“Witt”). Witt owns the trademarks, copyrights and other intellectual property rights relating to these, as well as any goodwill arising from the use of any part of a Witt trademark. The use of the Witt trademark for commercial purposes without the prior written permission from Witt may be a trademark violation or disloyal competition in violation of applicable laws.

This manual was created by Witt and Witt reserves all copyrights to this manual. No individual or legal entity may use, copy, modify or distribute this manual, in whole or in part, or combine or sell it together with other products without the prior written consent of Witt.

All described functions and instructions were updated at the time of this manual being printed. However, the actual product may vary due to ongoing improvements to features and design.

WARRANTY AND SERVICE

Your new product comes with a 2-year warranty on manufacturing and material defects, valid from the documented date of purchase. The warranty covers manufacturing defects in materials and workmanship.

If you require service or support, please contact the retailer from whom you purchased the product. When contacting us regarding service, please have the product name and serial number to hand. This information can be found on the rating plate. You may wish to make a note of the information in this manual for future reference. This makes it easier for the service technician to quickly identify the correct spare parts.

Enter the serial number here: _____

The manufacturer and/or distributor cannot be held liable for damage to the product or personal injury resulting from failure to comply with the safety instructions.

Failure to follow the instructions may invalidate the warranty.

The warranty does not cover:

- Faults and damage that are not due to manufacturing or material issues
- Normal, reasonable wear and tear (e.g. heat-induced discolouration of grilles/panels).
- Damage to the product caused by pests.
- If non-genuine spare parts have been used.
- If the instructions in the user’s manual have not been followed.
- If the installation has not been carried out as instructed.
- If non-professionals have installed or repaired the product.
- Rust and tarnishing.
- Batteries or other wearing parts

Unnecessary service

If the product is sent in for repair and it is found that the fault could have been rectified by following the user manual, the costs associated with the inspection and repair may be charged to the customer in accordance with the applicable regulations.

Product safety

If you believe that the product poses a safety risk (e.g. it smokes or smells of burning, becomes abnormally hot, or has a damaged cable or parts when purchased), you must stop using it immediately.

If you have any safety-related questions, or if you are aware of any incidents or potential risks, please contact your dealer or:

Witt Denmark A/S, Gødstrup Søvej 9, 7400 Herning, Denmark - Email: safety@witt.dk

When contacting us, please provide the following information:

- Product model
- Serial number
- Description of the incident
- Photos (if available)

The information is used to assess the situation and implement the necessary safety measures.

Damage during transport
Any transport damage discovered upon delivery by the retailer to the customer is solely a matter between the customer and the retailer. In case the customer has transported the product themselves, the supplier assumes no liability for any transport damage.

Any transport damage must be reported immediately and no later than 24 hours after the product has been delivered. If not, the customer's claim will be rejected.

Commercial purchases
A commercial purchase is any purchase of appliances that are not to be used in a private household, but are used for commercial purposes (restaurants, cafés, canteens, etc.) or are used for rental or other use that includes multiple users.

No warranty is provided for commercial purchases, as this product is intended for normal household use only.

DISPOSAL AND RECYCLING

Important environmental information
Compliance with the WEEE directive and disposing of products that are no longer usable:
This product complies with the EU WEEE Directive (2012/19/EU). The product is marked with the symbol for waste electrical and electronic equipment (WEEE).

The symbol found on the product or packaging indicates that the product must not be disposed of as normal household waste. Instead, it must be handed in at a relevant collection point for the recycling of electrical and electronic equipment. By ensuring this product is disposed of correctly, you are helping to prevent potential negative consequences for the environment and human health that might otherwise arise from the incorrect handling of waste.

For further information on recycling this product, please contact your local council, your local waste management scheme or the retailer from whom you purchased the product.

Compliance with the RoHS Directive

The product you have purchased complies with the EU RoHS Directive (2011/65/EU). The product does not contain any harmful or prohibited substances as defined by the Directive.

Information about packaging
The product's packaging is made from recyclable materials in accordance with current environmental regulations.
Do not dispose of the packaging with household waste or other rubbish. Instead, take it to a local packaging collection point.

The full EU Declaration of Conformity can be obtained from the manufacturer.

Witt Denmark A/S
Gødstrup Søvej 9
DK-7400 Herning
Denmark
www.witt.dk

witt